Town of Needham, Massachusetts

PLANS FOR THE CONSTRUCTION OF
NEWMAN PLAYING FIELDS
Improvements Project

1155 Central Ave
Needham, Massachusetts

AERIAL MAP OF THE SITE

PRELIMINARY DESIGN DOCUMENTS
NOT FOR CONSTRUCTION

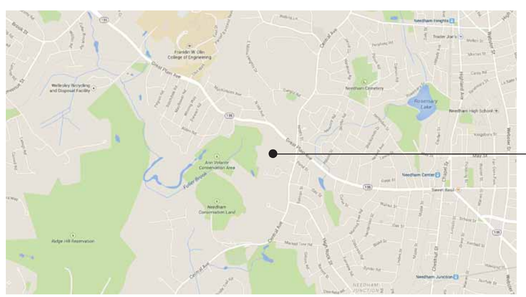

NEWMAN SCHOOL
Locus Map

January 2015

Prepared By

Weston&Sampson

1899 ESTABLISHED

Weston & Sampson

427 Main Street Needham, MA
(508) 698-3034 (800) Sampson
www.westonandsampson.com

SHEET INDEX

C.01.....COVER
L0.00.....GENERAL NOTES & LEGEND
L0.01.....OVERALL EXISTING CONDITIONS & INDEX PLAN
L1.00.....FIELDS EXISTING CONDITIONS PLAN
L2.00.....FIELDS SITE PREPARATIONS PLAN
L2.01.....FIELDS STAGING PLAN
L3.00.....FIELDS OVERALL LAYOUT & MATERIALS PLAN
L3.01.....FIELDS LAYOUT & MATERIALS ENLARGEMENT PLAN 1
L3.02.....FIELDS LAYOUT & MATERIALS ENLARGEMENT PLAN 2
L4.00.....FIELDS OVERALL GRADING & DRAINAGE PLAN
L4.01.....FIELDS GRADING & DRAINAGE ENLARGEMENT PLAN 1
L4.02.....FIELDS GRADING & DRAINAGE ENLARGEMENT PLAN 2
L5.01..... CONSTRUCTION DETAILS 1
L5.02.....CONSTRUCTION DETAILS 2
L5.03..... CONSTRUCTION DETAILS 3
L5.04.....CONSTRUCTION DETAILS 4
L5.05..... CONSTRUCTION DETAILS 5
L5.06.....CONSTRUCTION DETAILS 6

2140215 - TOWN OF NEEDHAM, NEWMAN PLAYING FIELDS- Improvements Project- **PRELIMINARY DESIGN DOCUMENTS - 01.07.2015**

GENERAL NOTES

1. TOPOGRAPHICAL INFORMATION BASED UPON SURVEY PERFORMED BY NITSCH ENGINEERING, INC.
2. REFER TO EXISTING CONDITIONS FOR SURVEY LEGEND. ALL BIDDERS ARE REQUIRED TO INSPECT THE PROJECT SITE IN ITS ENTIRETY PRIOR TO SUBMITTING THEIR BID, AND BECOME FAMILIAR WITH ALL CONDITIONS AS THEY MAY AFFECT THEIR BID. CONTRACTOR AND SUB-CONTRACTOR SHALL BE FAMILIAR WITH ALL DRAWINGS AND SPECIFICATIONS PRIOR TO COMMENCING THE CONSTRUCTION.
3. LOCATIONS OF ANY UTILITIES SHOWN ON THESE PLANS ARE APPROXIMATE ONLY. CONTRACTOR SHALL BE RESPONSIBLE FOR VERIFYING THE LOCATION OF SUCH UTILITIES, PROTECTING ALL EXISTING UTILITIES AND REPAIRING ANY DAMAGE DONE DURING CONSTRUCTION. THE CONTRACTOR SHALL BE RESPONSIBLE FOR ALL ON-SITE COORDINATION WITH UTILITY COMPANIES AND PUBLIC AGENCIES AND FOR OBTAINING ALL REQUIRED PERMITS AND PAYING ALL REQUIRED FEES. IN ACCORDANCE WITH M.G.L. CHAPTER 82, SECTION 40, INCLUDING AMENDMENTS, CONTRACTORS SHALL NOTIFY ALL UTILITY COMPANIES AND GOVERNMENT AGENCIES IN WRITING PRIOR TO EXCAVATION. CONTRACTOR SHALL ALSO CALL "DIG SAFE" AT (888) 344-7233 NO LESS THAN 72 HOURS, (EXCLUSIVE OF WEEKENDS AND HOLIDAYS), PRIOR TO SUCH EXCAVATION. DOCUMENTATION OF REQUESTS SHALL BE PROVIDED TO PROJECT REPRESENTATIVE PRIOR TO EXCAVATION WORK.
4. WHERE AN EXISTING UTILITY IS FOUND TO CONFLICT WITH THE PROPOSED WORK, THE LOCATION, ELEVATION AND SIZE OF THE UTILITY SHALL BE ACCURATELY DETERMINED WITHOUT DELAY BY THE CONTRACTOR AND THE INFORMATION FURNISHED TO THE ENGINEER FOR RESOLUTION OF THE CONFLICT.
5. THE CONTRACTOR SHALL MAKE ALL ARRANGEMENTS FOR THE ALTERATION AND ADJUSTMENT OF GAS, ELECTRIC, TELEPHONE AND ANY OTHER PRIVATE UTILITIES BY THE UTILITY OWNER AT NO ADDITIONAL COST TO THE TOWN.
6. CONTRACTOR SHALL BE RESPONSIBLE FOR REVIEWING ALL DRAWINGS AND SPECIFICATIONS TO DETERMINE THE EXTENT OF EXCAVATION AND DEMOLITION REQUIRED TO RECEIVE SITE IMPROVEMENTS.
7. ANY DISCREPANCIES OR CONFLICTS BETWEEN THE DRAWINGS AND EXISTING CONDITIONS, EXISTING CONDITIONS TO REMAIN, TEMPORARY CONSTRUCTION, PERMANENT CONSTRUCTION AND WORK OF ADJACENT CONTRACTS SHALL BE BROUGHT TO THE ATTENTION OF THE OWNER BEFORE PROCEEDING. ITEMS ENCOUNTERED IN AREAS OF EXCAVATION THAT ARE NOT INDICATED ON THE DRAWINGS, BUT ARE VISIBLE ON SURFACE, SHALL BE THE CONTRACTOR'S RESPONSIBILITY AND SHALL BE REMOVED AT NO ADDITIONAL COST TO THE OWNER.
8. ANY ALTERATIONS TO THESE DRAWINGS MADE IN THE FIELD DURING CONSTRUCTION SHALL BE RECORDED BY THE GENERAL CONTRACTOR ON "AS-BUILT" DRAWINGS.
9. ALL AREAS DISTURBED BY THE CONTRACTOR'S OPERATIONS OUTSIDE THE PROJECT LIMITS, SHALL BE RESTORED TO THE ORIGINAL CONDITION BY THE CONTRACTOR AT NO ADDITIONAL COST AND TO THE SATISFACTION OF THE OWNER.
10. ALL WORK SHOWN ON THE PLANS AS BOLD SHALL REPRESENT PROPOSED WORK. THE TERM "PROPOSED (PROP)" INDICATES WORK TO BE CONSTRUCTED USING NEW MATERIALS OR, WHERE APPLICABLE, RE-USING EXISTING MATERIALS IDENTIFIED AS "REMOVE AND RESET (R&R)", OR REMOVE, RELOCATE, RESET, (R,R&R).
11. ALL KNOWN EXISTING STATE, COUNTY AND TOWN LOCATION LINES AND PRIVATE PROPERTY LINES HAVE BEEN ESTABLISHED FROM AVAILABLE INFORMATION AND ARE INDICATED ON THE PLANS.
12. THE CONTRACTOR SHALL TAKE ALL NECESSARY PRECAUTIONS TO PROTECT HIS EMPLOYEES, AS WELL AS PUBLIC USERS FROM INJURY DURING THE ENTIRE CONSTRUCTION PERIOD USING ALL NECESSARY SAFEGUARDS, INCLUDING BUT NOT LIMITED TO, THE ERECTION OF TEMPORARY WALKS, STRUCTURES, PROTECTIVE BARRIERS, COVERING, OR FENCES AS NEEDED.
13. THE CONTRACTOR SHALL SUPPLY THE OWNER WITH THE NAME OF THE OSHA "COMPETENT PERSON" PRIOR TO CONSTRUCTION.
14. FILLING OF EXCAVATED AREAS SHALL NOT TAKE PLACE WITHOUT THE PRESENCE OR PERMISSION OF THE OWNER.
15. EXISTING TREES TO REMAIN SHALL BE PROTECTED FROM CONSTRUCTION ACTIVITIES. NO STOCKPILING OF MATERIAL, EQUIPMENT OR VEHICULAR TRAFFIC SHALL BE ALLOWED WITHIN THE DRIP LINE OF TREES TO REMAIN. NO GUYS SHALL BE ATTACHED TO ANY TREE TO REMAIN. WHEN NECESSARY OR AS DIRECTED BY THE ENGINEER, THE CONTRACTOR SHALL ERECT TEMPORARY BARRIERS FOR THE PROTECTION OF EXISTING TREES DURING CONSTRUCTION.
16. TREES AND SHRUBS WITHIN THE LIMITS OF WORK SHALL BE REMOVED ONLY UPON THE APPROVAL OF THE ENGINEER OR AS NOTED ON THE PLANS.
17. THE CONTRACTOR SHALL CALL DIGSAFE AT 1-888-344-7233 AT LEAST 72 HOURS, SATURDAYS, AND HOLIDAYS EXCLUDED, PRIOR TO EXCAVATING AT ANY LOCATION, A COPY OF THE DIGSAFE PROJECT REFERENCE NUMBER(S) SHALL BE GIVEN TO THE OWNER PRIOR TO EXCAVATION.
18. NO FILLING SHALL OCCUR AROUND EXISTING TREES TO REMAIN WITHOUT THE APPROVAL OF THE OWNER OR OWNER REPRESENTATIVE.
19. THE CONTRACTOR SHALL REMOVE ALL SURFACE VEGETATION PRIOR TO GRADING THE SITE. STUMPS SHALL BE STOCKPILED ON SITE FOR DISPOSAL BY THE TOWN. TEMPORARY EROSION CONTROL MEASURES SHOWN ON THE DRAWINGS (INCLUDING SILT FENCE, STRAW WATTLES, OR SILT SOCKS) SHALL BE INSTALLED BY THE CONTRACTOR. THE CONTRACTOR SHALL BE RESPONSIBLE FOR MAINTAINING THESE TEMPORARY EROSION CONTROL MEASURES THROUGHOUT THE PROJECT WHICH COST SHALL BE INCIDENTAL TO THE PROJECT.
20. ALL UNSUITABLE UNCONTAMINATED EXCESS SOIL FROM CONSTRUCTION ACTIVITIES SHALL BE DISPOSED OF THE BY THE CONTRACTOR AT NO ADDITIONAL COST TO THE TOWN. REMOVAL ACTIVITIES SHALL BE ACCORDANCE WITH STATE AND LOCAL REGULATIONS AT NO ADDITIONAL COST TO THE TOWN. SUITABLE SOIL EXCAVATION AS PART OF THE PROJECT MUST MEET ONE OR MORE OF THE MATERIAL REQUIREMENTS SPECIFIED IN 02300-EARTHWORK. ON-SITE FILL MATERIALS, WHICH DO NOT CONFORM TO SPEC 02300, SHALL NOT BE USED BELOW ANY STRUCTURES. IF THE CONTRACTOR PROPOSES TO USE THE EXISTING FILL ON SITE BELOW PAVEMENT AREAS, HE MUST DEMONSTRATE THAT THE FILL MEETS THE REQUIREMENTS PER 02300. ALL EXCAVATED FILL MATERIAL WHICH DOES NOT MEET THE REQUIREMENTS OF THE CONTRACT DOCUMENTS SHALL BE REMOVED AND DISPOSED OF OFF-SITE AT NO ADDITIONAL COST.
21. CONTRACTOR IS RESPONSIBLE FOR STAKING CONSTRUCTION BASELINES IN FIELD. NO CONSTRUCTION WILL BE PERFORMED WITHOUT THE PROPOSED BASELINES AND LAYOUTS APPROVED BY THE ENGINEER.
22. NO FILL SHALL CONTAIN HAZARDOUS MATERIALS.
23. CONTRACTOR SHALL PROVIDE TEMPORARY FENCING AROUND PERIMETER OF WORK AREA (LIMIT OF WORK). FENCE SHALL NOT IMPEDE TRAVEL WAYS.
24. ANY QUANTITIES SHOWN ON PLANS ARE FOR COMPARATIVE BIDDING PURPOSES ONLY. IT IS THE CONTRACTOR'S RESPONSIBILITY TO VISIT THE PROJECT SITE TO VERIFY ALL QUANTITIES AND CONDITIONS PRIOR TO SUBMITTING BID.
25. ALL EXISTING DRAINAGE FACILITIES TO REMAIN SHALL BE MAINTAINED FREE OF DEBRIS, SOIL, SEDIMENT, AND FOREIGN MATERIAL AND OPERATIONAL THROUGHOUT THE LIFE OF THE CONTRACT. REMOVE ALL SOIL, SEDIMENT, DEBRIS AND FOREIGN MATERIAL FROM ALL DRAINAGE STRUCTURES, INCLUDING BUT NOT LIMITED TO, DRAINAGE INLETS, MANHOLES AND CATCH BASINS WITHIN THE LIMIT OF WORK AND DRAINAGE STRUCTURES OUTSIDE THE LIMIT OF WORK THAT ARE IMPACTED BY THE WORK FOR THE ENTIRE DURATION OF CONSTRUCTION.
26. CONTRACTOR'S STAGING AREA MUST BE WITHIN THE CONTRACT LIMIT LINE AND IN AREAS APPROVED BY OWNER. ANY OTHER AREAS THAT THE CONTRACTOR MAY WISH TO USE FOR STAGING MUST BE COORDINATED WITH THE OWNER.
27. THE CONTRACTOR SHALL KEEP ALL STREETS, PARKING LOTS AND WALKS THAT ARE NOT RESTRICTED FROM PUBLIC USE DURING CONSTRUCTION BROOM CLEAN AT ALL TIMES. THE CONTRACTOR SHALL USE ACCEPTABLE METHODS AND MATERIALS TO MAINTAIN ADEQUATE DUST CONTROL THROUGHOUT CONSTRUCTION.
28. CONTRACTOR SHALL COORDINATE ALL WORK WITH THE OWNER.
29. CONTRACTOR SHALL DEWATER AS NECESSARY TO PERFORM THE PROPOSED WORK. CONTRACTOR SHALL BE AWARE OF PERCHED GROUNDWATER. (SEE SPECIFICATION SECTION 00320 SUBSURFACE DATA).
30. THE LIMIT OF WORK SHALL BE DELINEATED IN THE FIELD PRIOR TO THE START OF SITE CLEARING OR CONSTRUCTION.
31. DEEP SUMP CATCH BASINS AND STORMWATER BASIN SHALL BE CLEANED FOLLOWING CONSTRUCTION AND SHALL FOLLOW THE OPERATION AND MAINTENANCE PLAN THEREAFTER.
32. HAULING OF EARTH MATERIALS TO AND FROM THE SITE SHALL BE RESTRICTED TO THE HOURS OF XXX AM TO XXX PM XXX THROUGH XXX.
33. ANY BOULDERS 3 CY OR SMALLER SHALL BE CONSIDERED UNDOCUMENTED FILL AND SHALL BE DISPOSED OF AT NO ADDITIONAL COST TO THE TOWN.
34. WORK ON SATURDAYS SHALL ONLY BE CONDUCTED IF PRIOR WRITTEN PERMISSION IS PROVIDED BY THE TOWN.
35. THE TERM "AS DIRECTED" AS USED IN THE CONTRACT DRAWINGS SHALL BE REPLACED WITH "AS REQUIRED".

EROSION AND SEDIMENT CONTROL NOTES

1. ALL SEDIMENT AND EROSION CONTROL DEVICES SHALL BE PUT INTO PLACE PRIOR TO BEGINNING ANY CONSTRUCTION OR DEMOLITION. REFER TO PLAN FOR APPROXIMATE LOCATION OF EROSION AND SEDIMENT CONTROL. REFER TO SPECS AND DETAILS FOR TYPE OF EROSION AND SEDIMENT CONTROL.
2. THE CONTRACTOR SHALL BE RESPONSIBLE FOR THE CONTINUAL MAINTENANCE OF ALL CONTROL DEVICES THROUGHOUT THE DURATION OF THE PROJECT.
3. CONTRACTOR SHALL MEET ALL OF THE STATE OF MASSACHUSETTS D.E.P. AND THE TOWN OF NEEDHAM WETLAND ORDINANCE REGULATIONS FOR SEDIMENT AND EROSION CONTROL.
4. EXCAVATED MATERIAL STOCKPILED ON THE SITE SHALL BE SURROUNDED BY A RING OF UNBROKEN SEDIMENT AND EROSION CONTROL FENCE. THE LIMITS OF ALL GRADING AND DISTURBANCE SHALL BE KEPT TO A MINIMUM WITHIN THE APPROVED AREA OF CONSTRUCTION. ALL AREAS OUTSIDE OF THE LIMIT OF CONTRACT SHALL REMAIN TOTALLY UNDISTURBED UNLESS OTHERWISE APPROVED BY OWNER'S REPRESENTATIVE.
5. ALL CATCH BASINS AND DRAIN GRATES WITHIN LIMIT OF CONTRACT SHALL BE PROTECTED WITH FILTER FABRIC DURING THE ENTIRE DURATION OF CONSTRUCTION.
6. EROSION CONTROL BARRIERS TO BE INSTALLED AT THE TOE OF SLOPES. SEE GRADING & DRAINAGE PLANS, NOTES, DETAILS AND SPECIFICATIONS.
7. ANY AREA OUTSIDE THE PROJECT LIMIT THAT IS DISTURBED SHALL BE RESTORED TO ITS ORIGINAL CONDITION AT NO COST TO THE OWNER.
8. THE CONTRACTOR SHALL PROVIDE DUST CONTROL FOR CONSTRUCTION OPERATIONS AS APPROVED BY OWNER.
9. ALL POINTS OF CONSTRUCTION EGRESS OR INGRESS SHALL BE MAINTAINED TO PREVENT TRACKING OR FLOWING OF SEDIMENT ON TO PUBLIC/PRIVATE ROADS.

DEMOLITION & SITE PREPARATION NOTES

1. THE CONTRACTOR SHALL INCLUDE IN THE BID THE COST OF REMOVING ANY EXISTING SITE FEATURES AND APPURTENANCES NECESSARY TO ACCOMPLISH THE CONSTRUCTION OF THE PROPOSED SITE IMPROVEMENTS. THE CONTRACTOR SHALL ALSO INCLUDE IN THE BID THE COST NECESSARY TO RESTORE SUCH ITEMS IF THEY ARE SCHEDULED TO REMAIN AS PART OF THE FINAL SITE IMPROVEMENTS. REFER TO PLANS TO DETERMINE EXCAVATION, DEMOLITION AND TO DETERMINE THE LOCATION OF THE PROPOSED SITE IMPROVEMENTS.
2. THE OWNER RESERVES THE RIGHT TO REVIEW ALL MATERIALS DESIGNATED FOR REMOVAL AND TO RETAIN OWNERSHIP OF SUCH MATERIALS. IF THE OWNER RETAINS ANY MATERIAL THE CONTRACTOR SHALL MAKE ARRANGEMENTS WITH THE OWNER TO HAVE THOSE MATERIALS REMOVED OFF SITE AT NO ADDITIONAL COST.
3. UNLESS SPECIFICALLY NOTED TO BE SAVED / STOCKPILED (R&S) OR REUSED / RELOCATED (R&R), ALL SITE FEATURES CALLED FOR REMOVAL (REM) SHALL BE REMOVED WITH THEIR FOOTINGS, ATTACHMENTS, BASE MATERIAL, ETC, TRANSPORTED FROM THE SITE TO BE DISPOSED OF IN A LAWFUL MANNER AT AN ACCEPTABLE DISPOSAL SITE AND AT NO COST TO THE OWNER.
4. ALL EXISTING SITE FEATURES TO REMAIN SHALL BE PROTECTED THROUGHOUT THE CONSTRUCTION PERIOD. ANY FEATURES DAMAGED DURING CONSTRUCTION OPERATIONS SHALL BE REPAIRED OR REPLACED TO THE SATISFACTION OF THE OWNER'S REPRESENTATIVE AT NO ADDITIONAL COST.
5. DURING EARTHWORK OPERATIONS, CONTRACTOR SHALL TAKE CARE TO NOT DISTURB EXISTING MATERIALS TO REMAIN, OUTSIDE THE LIMITS OF EXCAVATION AND BACKFILL AND SHALL TAKE WHATEVER MEASURES NECESSARY, AT THE CONTRACTOR'S EXPENSE, TO PREVENT ANY EXCAVATED MATERIAL FROM COLLAPSING. ALL BACKFILL MATERIALS SHALL BE PLACED AND COMPACTED AS SPECIFIED TO THE SUBGRADE REQUIRED FOR THE INSTALLATION OF THE REMAINDER OF THE CONTRACT WORK.
6. IT SHALL BE THE CONTRACTOR'S OPTION, WITH CONCURRENCE OF THE OWNER, TO REUSE EXISTING GRAVEL IF IT MEETS THE REQUIREMENTS OF THE SPECIFICATIONS FOR GRAVEL BORROW.
7. ALL ITEMS CALLED FOR REMOVAL SHALL BE REMOVED TO FULL DEPTH INCLUDING ALL FOOTINGS, FOUNDATIONS, AND OTHER APPURTENANCES, EXCEPT AS SPECIFICALLY NOTED OTHERWISE.
8. 'CLEAR AND GRUB VEGETATION' SHALL INCLUDE REMOVAL OF GRASS, SHRUBS, AND UNDERBRUSH, REMOVAL OF ROOTS, ROUGH GRADING, INSTALLATION OF LOAM (IF APPLICABLE), FINE GRADING, SEEDING AND TURF ESTABLISHMENT BY THE CONTRACTOR.
9. TREES DESIGNATED FOR REMOVAL SHALL BE TAGGED BY CONTRACTOR AND APPROVED BY OWNER'S REPRESENTATIVE PRIOR TO COMMENCEMENT OF CONSTRUCTION.
10. THE STORAGE OF MATERIALS AND EQUIPMENT WILL BE PERMITTED AT LOCATIONS DESIGNATED BY OWNER OR OWNER'S REPRESENTATIVE. PROTECTION OF STORED MATERIALS AND EQUIPMENT SHALL BE THE SOLE RESPONSIBILITY OF THE CONTRACTOR.
11. STRIP & STORE EXISTING TOPSOIL FOR LATER REUSE WHERE APPROPRIATE, AND AS NOTED ON PLAN, WITH APPROPRIATE EROSION AND SEDIMENT CONTROLS.
12. LOAM / TOP SOIL DESIGNATED FOR REUSE AS GENERAL FILL SHALL BE BLENDED WITH SUITABLE BORROW MATERIAL AS SPECIFIED.
13. THE CONTRACTOR SHALL PROTECT EXISTING TREES TO REMAIN, CONTRACTOR SHALL INSTALL TREE PROTECTION BARRIER AFTER CLEARING UNDERBRUSH AND TAKE DUE CARE TO PREVENT INJURY TO TREES DURING CLEARING OPERATIONS.

LAYOUT & MATERIALS NOTES

1. REFER TO EXISTING CONDITIONS PLANS FOR SURVEY INFORMATION (SHEET L0.01 AND L1.00).
2. COORDINATE ALL LAYOUT ACTIVITIES WITH THE SCOPE OF WORK CALLED FOR BY DEMOLITION, GRADING AND UTILITIES OPERATIONS ENCOMPASSED BY THIS CONTRACT. SET, PROTECT AND REPLACE REFERENCE STAKES AS NECESSARY OR AS REQUIRED BY THE OWNER'S REPRESENTATIVE.
3. ALL WORK SHALL BE PERFORMED BY CONTRACTOR UNLESS SPECIFICALLY INDICATED THAT THE WORK WILL BE PERFORMED "XXX".
4. TO FACILITATE LAYOUT OF PROPOSED SITE FEATURES AND FACILITIES, LAYOUT INFORMATION FOR CERTAIN FUTURE WORK, WHICH IS NOT INCLUDED WITHIN THE SCOPE OF THIS CONTRACT HAS BEEN PROVIDED ON THE LAYOUT AND MATERIALS PLAN FOR INFORMATION ONLY. THE LAYOUT OF SITE AMENITIES AND FENCES MUST BE APPROVED BY THE OWNER'S REPRESENTATIVE PRIOR TO INSTALLATION. SOME ITEMS ARE "NOT IN CONTRACT" (NIC) AND SHOWN FOR REFERENCE ONLY.
5. THE LAYOUT OF SITE AMENITIES AND FENCES MUST BE APPROVED BY THE OWNER'S REPRESENTATIVE PRIOR TO INSTALLATION.
6. THE LAYOUT OF ALL NEW PATHWAYS / WALKWAYS AND THE GRADING OF ALL SLOPES AND CROSS SLOPES SHALL CONFORM TO THE COMMONWEALTH OF MASSACHUSETTS RULES AND REGULATIONS FOR HANDICAP ACCESS CMR 521, AND THE AMERICANS WITH DISABILITIES ACT (ADA), TITLE 3. THE CONTRACTOR SHALL NOTIFY THE OWNER IMMEDIATELY OF ANY DISCREPANCIES BETWEEN ACTUAL CONDITIONS AND THOSE REQUIRED.
7. ALL LAYOUT LINES, OFFSETS, OR REFERENCES TO LOCATING OBJECTS ARE EITHER PARALLEL OR PERPENDICULAR UNLESS OTHERWISE DESIGNATED WITH ANGLE OFFSETS NOTED.
8. ALL PROPOSED SITE FEATURES SHALL BE LAID OUT AND STAKED FOR REVIEW AND APPROVAL BY THE OWNER'S REPRESENTATIVE PRIOR TO COMMENCEMENT OF INSTALLATION. ANY REQUIRED ADJUSTMENTS TO THE LAYOUT SHALL BE UNDERTAKEN AS DIRECTED, AT NO ADDITIONAL COST TO THE OWNER.
9. ALL PROPOSED PAVEMENTS SHALL MEET THE LINE AND GRADE OF EXISTING ADJACENT PAVEMENT SURFACES AND SHALL BE TREATED WITH AN RS-1 TACK COAT AT POINT OF CONNECTION. ALL PATHWAY WIDTHS SHALL BE AS NOTED ON THE LAYOUT AND MATERIALS PLAN.
10. THE CONTRACTOR SHALL VERIFY ALL DIMENSIONS AND GRADES ON THE GROUND AND REPORT ANY DISCREPANCIES IMMEDIATELY TO THE OWNER.
11. THE CONTRACTOR SHALL BE RESPONSIBLE FOR FIELD MEASUREMENT OF ALL PROPOSED FENCES AND GATES.
12. THE DEPTH OF LOAM BORROW FOR ALL PROPOSED LAWN AREAS SHALL BE 4" MINIMUM. ALL DISTURBED AREAS SHALL BE RESTORED WITH LOAM AND SEED UNLESS OTHERWISE NOTED
13. ALL REFERENCES TO LOAM AND SEED (L&S) REFER TO HYDROMULCH SEEDED LAWN.
14. EXISTING ACCESS ROAD GRAVEL MATERIALS SHALL BE REUSED WHENEVER POSSIBLE MAKING FIELD APPROVAL MANDATORY.
15. REFER TO DETAIL DRAWINGS FOR CONSTRUCTION DETAILS.

GRADING, UTILITIES & DRAINAGE NOTES

1. ALL WORK RELATING TO INSTALLATION, RENOVATION OR MODIFICATION OF WATER, DRAINAGE AND/OR SEWER SERVICES SHALL BE PERFORMED IN ACCORDANCE WITH THE STANDARDS OF THE TOWN OF NEEDHAM.
2. THE CONTRACTOR SHALL VERIFY ALL DIMENSIONS AND GRADES ON THE GROUND AND REPORT ANY DISCREPANCIES IMMEDIATELY TO THE OWNER.
3. ALL GRADING IS TO BE SMOOTH AND CONTINUOUS WHERE PROPOSED GRAVEL SURFACE MEETS EXISTING SURFACE, BLEND THE TWO PAVEMENTS AND ELIMINATE ROUGH SPOTS AND ABRUPT GRADE CHANGES AND MEET LINE AND GRADE OF EXISTING CONDITIONS WITH NEW IMPROVEMENTS.
4. CONTRACTOR SHALL MAINTAIN POSITIVE DRAINAGE (1.5% MINIMUM) AWAY FROM ALL BUILDING FOUNDATIONS AND STRUCTURES.
5. CONTRACTOR SHALL ENSURE ALL AREAS ARE PROPERLY PITCHED TO DRAIN, WITH NO SURFACE WATER PONDING OR PUDDLING.
6. ALL NEW WALKWAYS / ACCESS PATHS MUST CONFORM TO CURRENT AMERICANS WITH DISABILITIES ACT (ADA) REGULATIONS: WALKWAYS SHALL MAINTAIN A CROSS PITCH OF NOT MORE THAN ONE AND A HALF PERCENT (1.5%) AND THE RUNNING SLOPE (PARALLEL TO THE DIRECTION OF TRAVEL) BETWEEN 1% MIN. AND 5% MAX.
7. MINIMUM SLOPE ON ALL WALKWAYS WILL BE 1:100 OR 1% TO PROVIDE POSITIVE DRAINAGE. ANY DISCREPANCIES NOT ALLOWING THIS TO OCCUR SHALL BE REPORTED TO THE OWNER PRIOR TO CONTINUING WORK.
8. ALL UTILITY GRATES, COVERS OR OTHER SURFACE ELEMENTS INTENDED TO BE EXPOSED AT GRADE SHALL BE FLUSH WITH THE ADJACENT FINISHED GRADE AND ADJUSTED TO PROVIDE A SMOOTH TRANSITION AT ALL EDGES.
9. THE CONTRACTOR SHALL SET SUBGRADE ELEVATIONS TO ALLOW FOR POSITIVE DRAINAGE AND PROVIDE EROSION CONTROL DEVICES, STRUCTURES, MATERIALS AND CONSTRUCTION METHODS TO DIRECT SILT MIGRATION AWAY FROM DRAINAGE AND OTHER UTILITY SYSTEMS, PUBLIC/PRIVATE STREETS AND WORK AREAS. CLEAN BASINS REGULARLY AND AT THE END OF THE PROJECT.
10. EXCAVATION REQUIRED WITHIN PROXIMITY OF KNOWN EXISTING UTILITY LINES SHALL BE DONE BY HAND. CONTRACTOR SHALL REPAIR ANY DAMAGE TO EXISTING UTILITY LINES OR STRUCTURES INCURRED DURING CONSTRUCTION OPERATIONS AT NO COST TO THE OWNER.
11. WHERE NEW EARTHWORK MEETS EXISTING EARTHWORK, CONTRACTOR SHALL BLEND NEW EARTHWORK SMOOTHLY INTO EXISTING, PROVIDING VERTICAL CURVES OR ROUNDS AT ALL TOP AND BOTTOM OF SLOPES.
12. WHERE A SPECIFIC LIMIT OF WORK LINE IS NOT OBVIOUS OR IMPLIED, BLEND GRADES TO EXISTING CONDITIONS WITHIN 5 FEET OF PROPOSED CONTOURS.
13. RESTORE ALL DISTURBED AREAS AND LIMITS OF ALL REMOVALS TO LOAM AND SEED (L&S) UNLESS OTHERWISE NOTED.
14. SEE EARTHWORK SECTION OF SPECIFICATIONS FOR SPECIFIC EXCAVATION AND FILLING PROCEDURES.
15. FOR STRUCTURE REMODELING (REMOD), CONSTRUCTION METHODS SHALL FOLLOW MASSACHUSETTS DOT STANDARD SPEC. LATEST EDITION (SECTION 220)

ABBREVIATIONS

GENERAL

PROP	PROPOSED
ADJ	ADJUST
BIT. CONC.	BITUMINOUS CONCRETE
CEM. CONC.	CEMENT CONCRETE
℄	BASELINE
N.T.S.	NOT TO SCALE
B.M.	BENCH MARK
ABAN	ABANDON
MB	MAIL BOX
GRAN. CURB	GRANITE CURB
EXIST. (OR EX.)	EXISTING
FDN	FOUNDATION
F.L. (OR F)	FLOW LINE
ℙ	PROPERTY LINE
PVMT	PAVEMENT
P.W.W.	PAVED WATERWAY
RC	REINFORCED CONCRETE
M.H.B.	MASSACHUSETTS HIGHWAY BOUND
REM	REMOVE
REMOD	REMODEL
RET	RETAIN
R.O.W.	RIGHT-OF-WAY
R&R	REMOVE AND RESET
R,R&R	REMOVE, RELOCATED AND RESET
R&S	REMOVE AND STACK
R&D	REMOVE AND DISPOSE
SB	STONE BOUND
NIC	NOT IN CONTRACT
H.C.	HANDICAP
WCR	WHEELCHAIR RAMP
FF	FINISHED FLOOR
HMA	HOT MIX ASPHALT
G.C.	GENERAL CONTRACTOR
E.C.	ELECTRICAL CONTRACTOR
P.C.	PLUMBING CONTRACTOR
SWEL	SOLID WHITE EDGE LINE
BWLL	BROKEN WHITE LANE LINE
SYEL	SOLID YELLOW EDGE LINE
SB/DH	STONE BOUND/ DRILL HOLE
CLF	CHAIN LINK FENCE
TEMP.	TEMPORARY
TYP.	TYPICAL
EQ	EQUIPMENT
H.C.	HANDICAP
EOP	EDGE OF PAVEMENT
PROT	PROTECT
CTE	CONNECT TO EXISTING
RL	ROOF LEADER
L.O.W.	LIMIT OF WORK
VIF	VERIFY IN FIELD

UTILITIES

GICI	GUTTER INLET W/ CURB INLET
CBCI	CATCH BASIN W/ CURB INLET
CB	CATCH BASIN
C.I.T.	CAST IN TYPE
F&G	FRAME AND GRATE
F&C	FRAME AND COVER
CI	CURB INLET
CIP	CAST IRON PIPE
CMP	CORRUGATED METAL PIPE
DI	DUCTILE IRON PIPE
GI	GUTTER INLET
ACCM PIPE	ASPHALT COATED CORRUGATED METAL PIPE
HYD	HYDRANT
INV. ELEV.	INVERT ELEVATION
UP	UTILITY POLE
SMH	SEWER MANHOLE
WG	WATER GATE
DS	DOWN SPOUT
HDPE	HIGH DENSITY POLYETHYLENE PIPE
PVC	POLYVINYL CHLORIDE
RCP	REINFORCED CONCRETE PIPE
DMH	DRAIN MANHOLE
LB	LEACHING BASIN
LG	LEACHING GALLEY
CI	CAST IRON
OCS	OUTLET CONTROL STRUCTURE
OGT	OIL AND GRIT TRAP
VC	VITRIFIED CLAY PIPE
LP	LIGHT POLE
OHW	OVERHEAD WIRE
UPLP	UTILITY POLE WITH LIGHT
SWTU	STORM WATER TREATMENT UNIT
HH	HANDHOLE
GW	GARAGE WASTE
CO	CLEANOUT
LC	LEACHING CHAMBER
GV	GATE VALVE

ALIGNMENT/GRADING

BW	BOTTOM OF WALL
BC	BOTTOM OF CURB
PI	POINT OF INTERSECTION
PC	POINT OF CURVATURE
PT	POINT OF TANGENCY
PRC	POINT OF REVERSE CURVATURE
PCC	POINT OF COMPOUND CURVATURE
PVI	POINT OF VERTICAL INTERSECTION
PVC	POINT OF VERTICAL CURVATURE
PVT	POINT OF VERTICAL TANGENCY
ELEV	ELEVATION
CC	CENTER OF CURVE
H.P.	HIGH POINT
L.P.	LOW POINT
R	RADIUS OF CURVATURE
STA	STATION
S.S.D.	STOPPING SIGHT DISTANCE
TC	TOP OF CURB
TW	TOP OF WALL

GENERAL SYMBOLS

EXISTING	PROPOSED	
CB	CB	CATCH BASIN
CBCI		CATCH BASIN CURB INLET
		LEACHING GALLEY
		CURB (OR BERM)-TYPE NOTED
		EDGE OF ROAD
HH		HANDHOLE (NUMBER AS NOTED)
EMH	E E	ELECTRIC MANHOLE
TMH	T T	TELEPHONE MANHOLE
SMH	S	SEWER MANHOLE
DMH	D	DRAINAGE MANHOLE
GG	GG	GAS GATE
WG	WG	WATER GATE VALVE
		HYDRANT
		WELL
LP	OR LP	LIGHTPOLE
D	D	DRAIN PIPE
S	S S	SEWER MAIN
	S	SEWER MAIN BY P.C.
E	E E	ELECTRIC DUCT
C	T T	TELEPHONE/COMMUNICATIONS/FIRE ALARM
	GW GW	GARAGE WASTE LINE
	GW	GARAGE WASTE LINE BY P.C.
	V	VENTS BY P,C.
G	GAS GAS	GAS MAIN
W	W	WATER MAIN
OHW OHW	OHW	OVERHEAD WIRES
GUARD RAIL	OR	GUARD RAIL (SIZE AND TYPE NOTED)
LABEL / DATE		HIGHWAY / PROPERTY BOUND (TYPE NOTED)
NAME		CITY OR TOWN OR COUNTY LAYOUT LINE
12 N00°00'00"E		CITY,TOWN OR COUNTY BOUNDARY
+57.59 PC		BASE OR SURVEY LINE
		CENTERLINE OF CONSTRUCTION
		PROPERTY LINE
	WCR	WHEELCHAIR RAMP (WCR)
CLF OR WOOD FENCE	SEE PLANS	TREE (SIZE AND TYPE NOTED)
	SEE PLANS	FENCE (SIZE AND TYPE NOTED)
		EASEMENT LINE/ FUTURE CITY PROPERTY LINE
M#.#.#		MASSHIGHWAY STANDARD SPECIFICATION REFERENCE NUMBER
TP1	TP-2 OR TP1	TEST PIT
MON WELL (TYP)		MONITORING WELL
UP 8	OHW OHW	UTILITY POLE
FLAG POLE		GUY POLE
		FLAG POLE
		SIGN
		TREE LINE
		BOLLARD
		BIKE RACK
		SAWCUT
		EROSION CONTROL (SPECIFIED ON PLANS)
		OBSERVATION WELL
		LIMIT OF WORK
		WETLAND BUFFER
		TEMPORARY FENCE
CBF		CONCRETE BOUND FOUND
		TEMPORARY BENCHMARK (TBM)

PROGRESS PRINT
01/07/2015

01/07/2015 - PRELIMINARY DESIGN NOT FOR CONSTRUCTION

Project:
TOWN OF NEEDHAM, MA

NEWMAN PLAYING FIELDS & EASTMAN CONSERVATION AREA
Improvements Project
1155 CENTRAL AVE

Weston&Sampson
100 Foxborough Blvd., S.250 Foxborough, MA
(508) 698-3034 (800) Sampson
www.westonandsampson.com

Consultants:

North:

Revisions:

Rev	Date	Description

Seal:

PRELIMINARY DESIGN NOT FOR CONSTRUCTION

Date:

Scale:	AS SHOWN
Drawn By:	ACG/EJA
Reviewed By:	MSM
Checked By:	LFK
Approved By:	ERB

Drawing Title:
GENERAL NOTES & LEGEND

Sheet Number:
L0.00

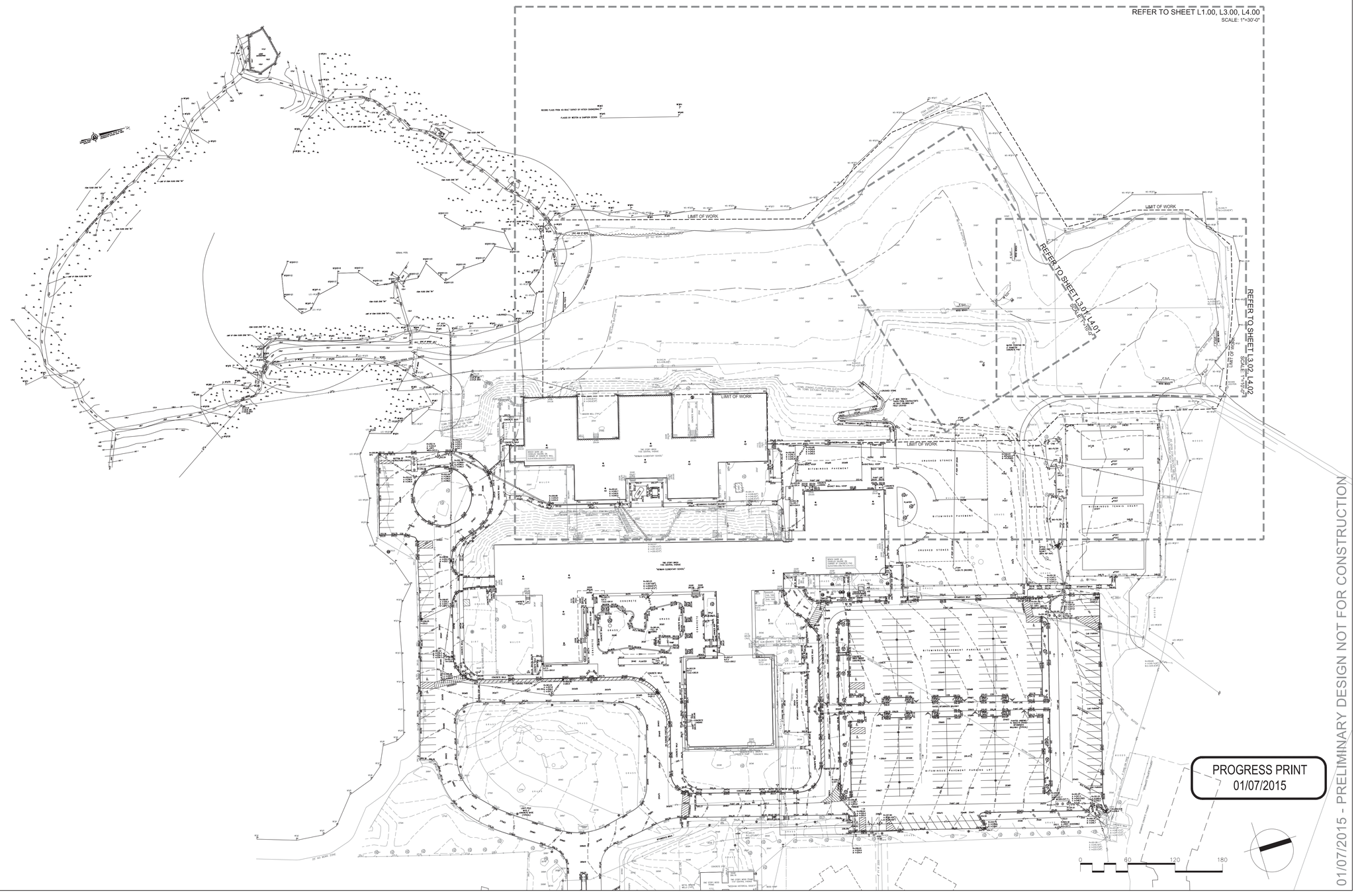

01/07/2015 - PRELIMINARY DESIGN NOT FOR CONSTRUCTION

Project:

TOWN OF NEEDHAM, MA

NEWMAN PLAYING FIELDS & EASTMAN CONSERVATION AREA

Improvements Project

1155 CENTRAL AVE

Weston&Sampson®

100 Foxborough Blvd., S.250 Foxborough, MA
(508) 698-3034 (800) Sampson
www.westonandsampson.com

Consultants:

North:

Revisions:

Rev	Date	Description

Seal:

PRELIMINARY DESIGN NOT FOR CONSTRUCTION

Date:	
Scale:	AS SHOWN
Drawn By:	ACG/EJA
Reviewed By:	MSM
Checked By:	LFK
Approved By:	ERB

Drawing Title:

OVERALL EXISTING CONDITIONS & INDEX PLAN

Sheet Number:

L0.01

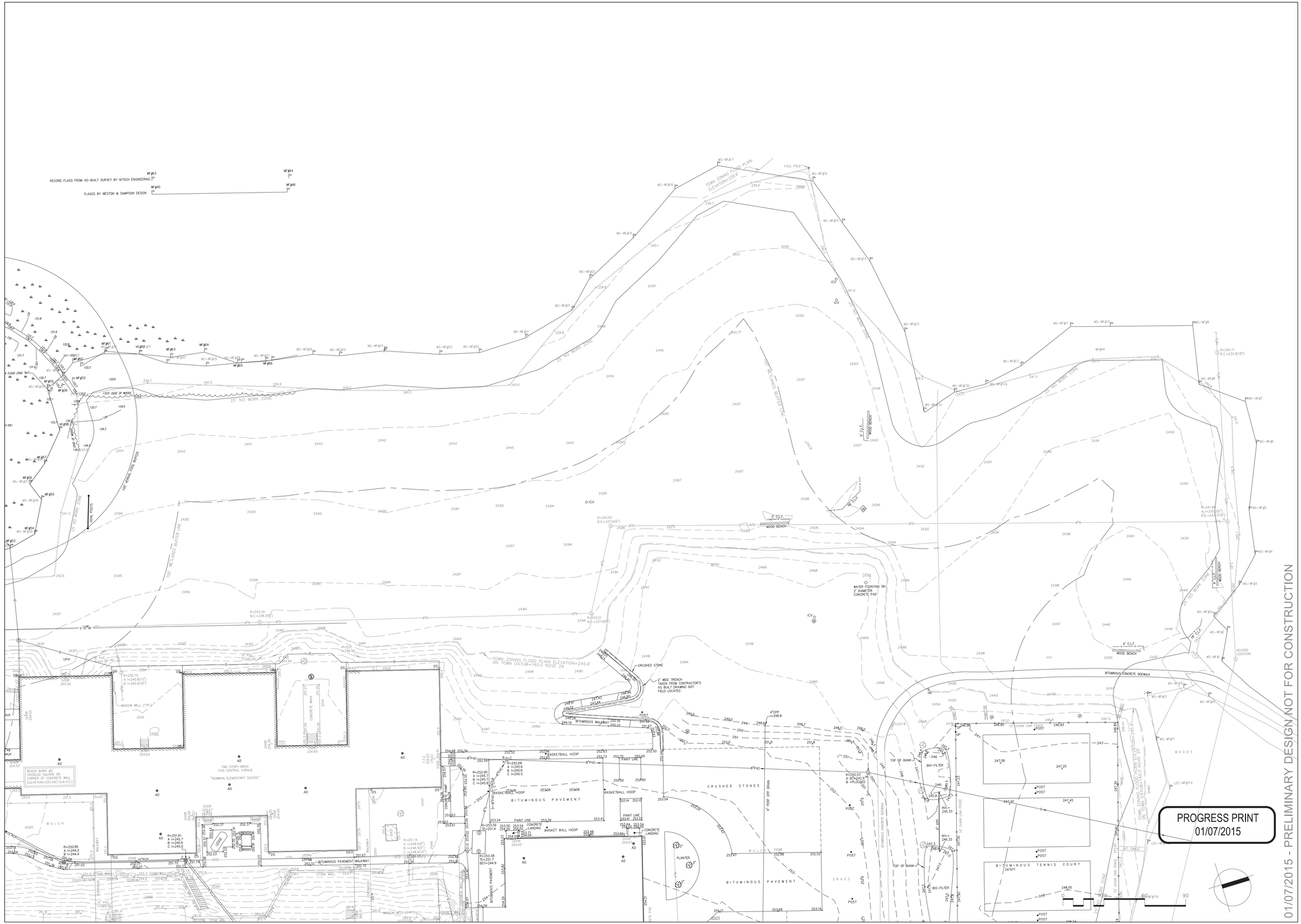

01/07/2015 - PRELIMINARY DESIGN NOT FOR CONSTRUCTION

Project:

TOWN OF NEEDHAM, MA

NEWMAN PLAYING FIELDS & EASTMAN CONSERVATION AREA

Improvements Project

1155 CENTRAL AVE

Weston&Sampson®

100 Foxborough Blvd., S.250 Foxborough, MA
(508) 698-3034 (800) Sampson
www.westonandsampson.com

Consultants:

North:

Revisions:

Rev	Date	Description

Seal:

PRELIMINARY DESIGN NOT FOR CONSTRUCTION

Date:

Scale:	AS SHOWN
Drawn By:	ACG/EJA
Reviewed By:	MSM
Checked By:	LFK
Approved By:	ERB

Drawing Title:

FIELDS EXISTING CONDITIONS PLAN

Sheet Number:

L1.00

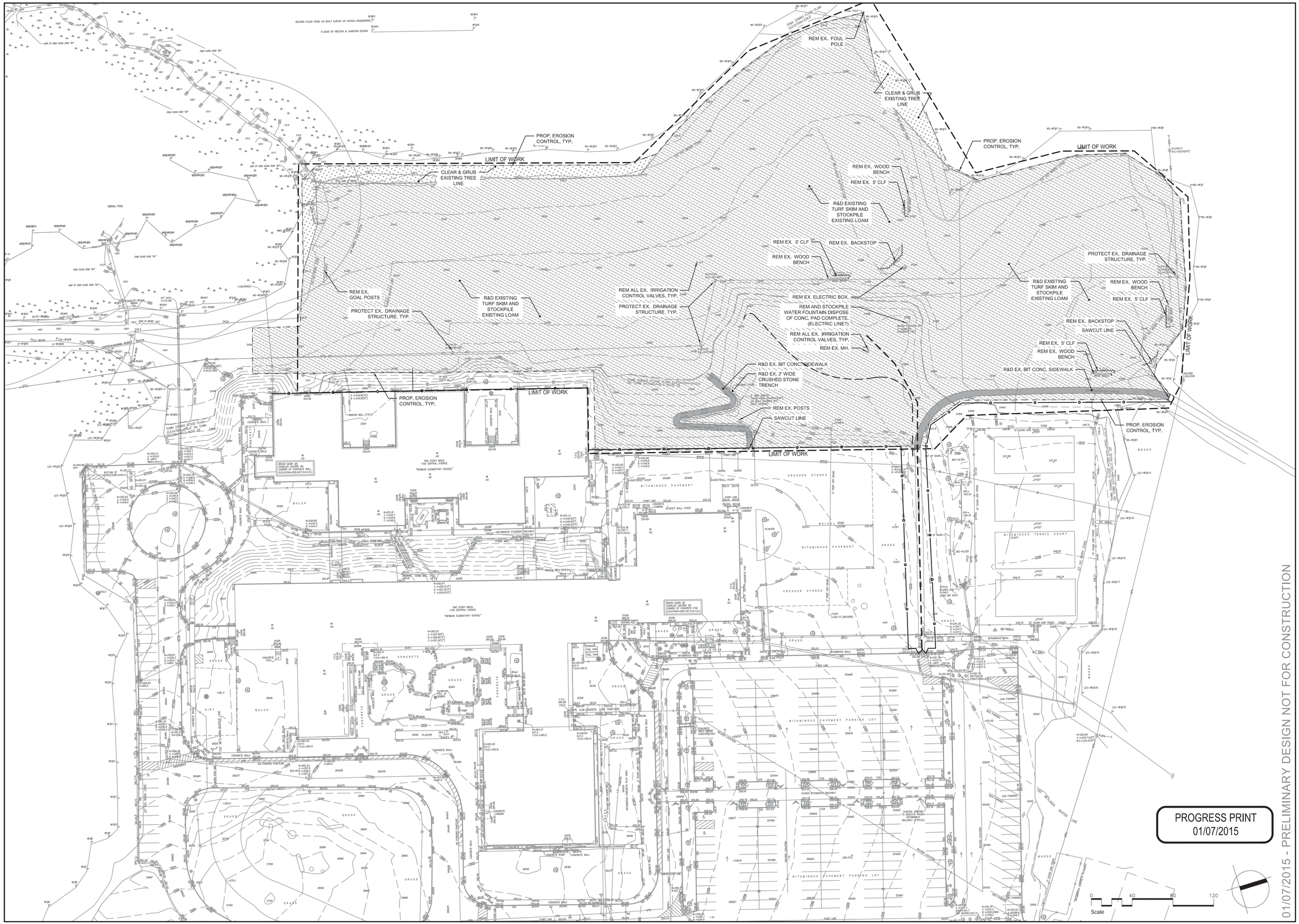

01/07/2015 - PRELIMINARY DESIGN NOT FOR CONSTRUCTION

Project:

TOWN OF NEEDHAM, MA

NEWMAN PLAYING FIELDS & EASTMAN CONSERVATION AREA

Improvements Project

1155 CENTRAL AVE

Weston&Sampson®

100 Foxborough Blvd., S.250 Foxborough, MA
(508) 698-3034 (800) Sampson
www.westonandsampson.com

Consultants:

North:

Revisions:

Rev	Date	Description

Seal:

PRELIMINARY DESIGN NOT FOR CONSTRUCTION

Date:	
Scale:	AS SHOWN
Drawn By:	ACG/EJA
Reviewed By:	MSM
Checked By:	LFK
Approved By:	ERB

Drawing Title:

FIELDS STAGING PLAN

Sheet Number:

L2.01

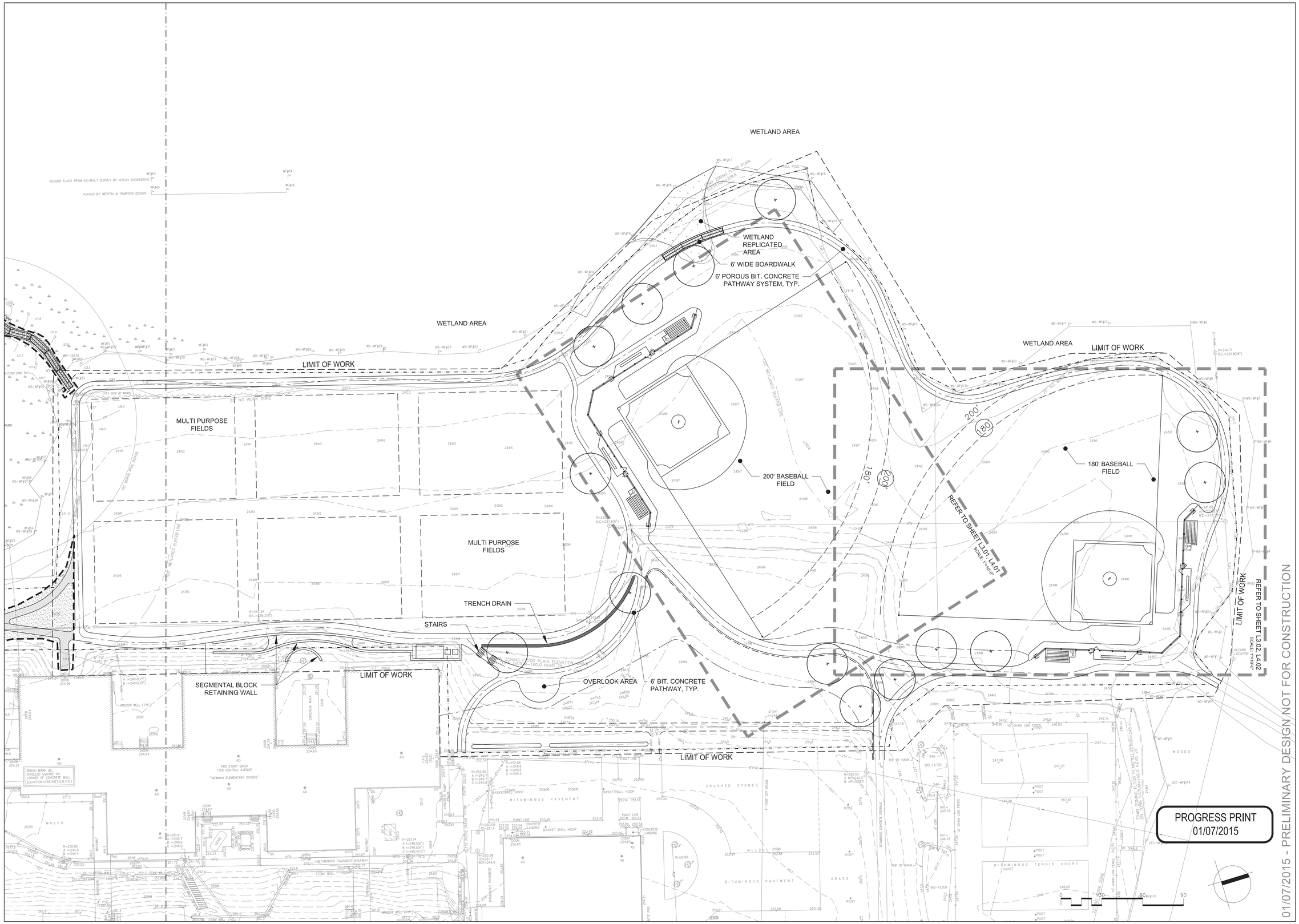

Project:

TOWN OF NEEDHAM, MA

NEWMAN PLAYING FIELDS & EASTMAN CONSERVATION AREA

Improvements Project

1155 CENTRAL AVE

Weston&Sampson®

100 Foxborough Blvd., S.250 Foxborough, MA
(508) 698-3034 (800) Sampson
www.westonandsampson.com

Consultants:

North:

Revisions:

Rev	Date	Description

Seal:

PRELIMINARY DESIGN NOT FOR CONSTRUCTION

Date:	
Scale:	AS SHOWN
Drawn By:	ACG/EJA
Reviewed By:	MSM
Checked By:	LFK
Approved By:	ERB

Drawing Title:

FIELDS OVERALL LAYOUT & MATERIALS PLAN

Sheet Number:

L3.00

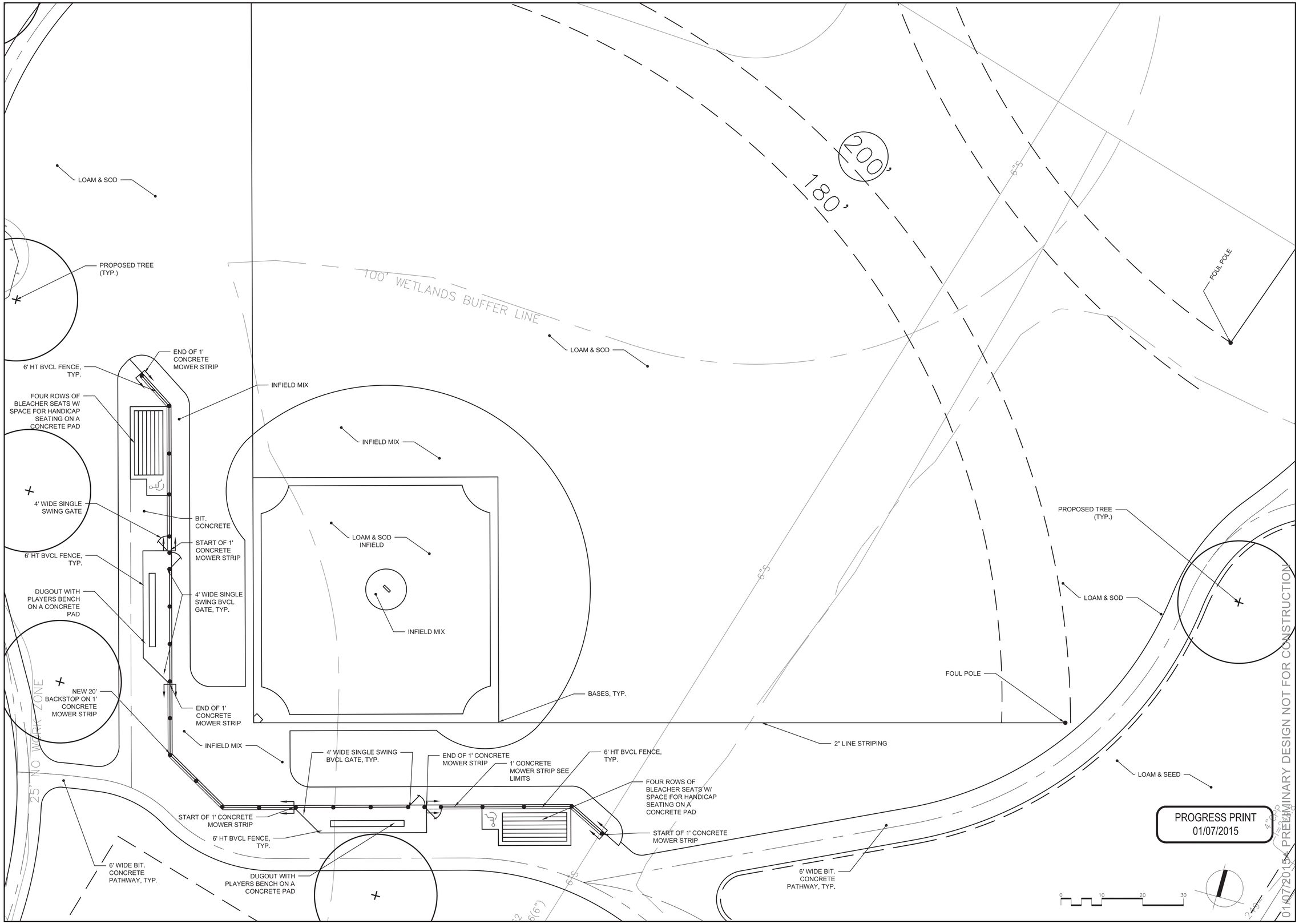

Project:

TOWN OF NEEDHAM, MA

NEWMAN PLAYING FIELDS & EASTMAN CONSERVATION AREA

Improvements Project

1155 CENTRAL AVE

Weston&Sampson

100 Foxborough Blvd., S.250 Foxborough, MA
(508) 698-3034 (800) Sampson
www.westonandsampson.com

Consultants:

North:

Revisions:

Rev	Date	Description

Seal:

PRELIMINARY DESIGN NOT FOR CONSTRUCTION

Date:	
Scale:	AS SHOWN
Drawn By:	ACG/EJA
Reviewed By:	MSM
Checked By:	LFK
Approved By:	ERB

Drawing Title:

FIELDS LAYOUT & MATERIALS ENLARGEMENT PLAN 1

Sheet Number:

L3.01

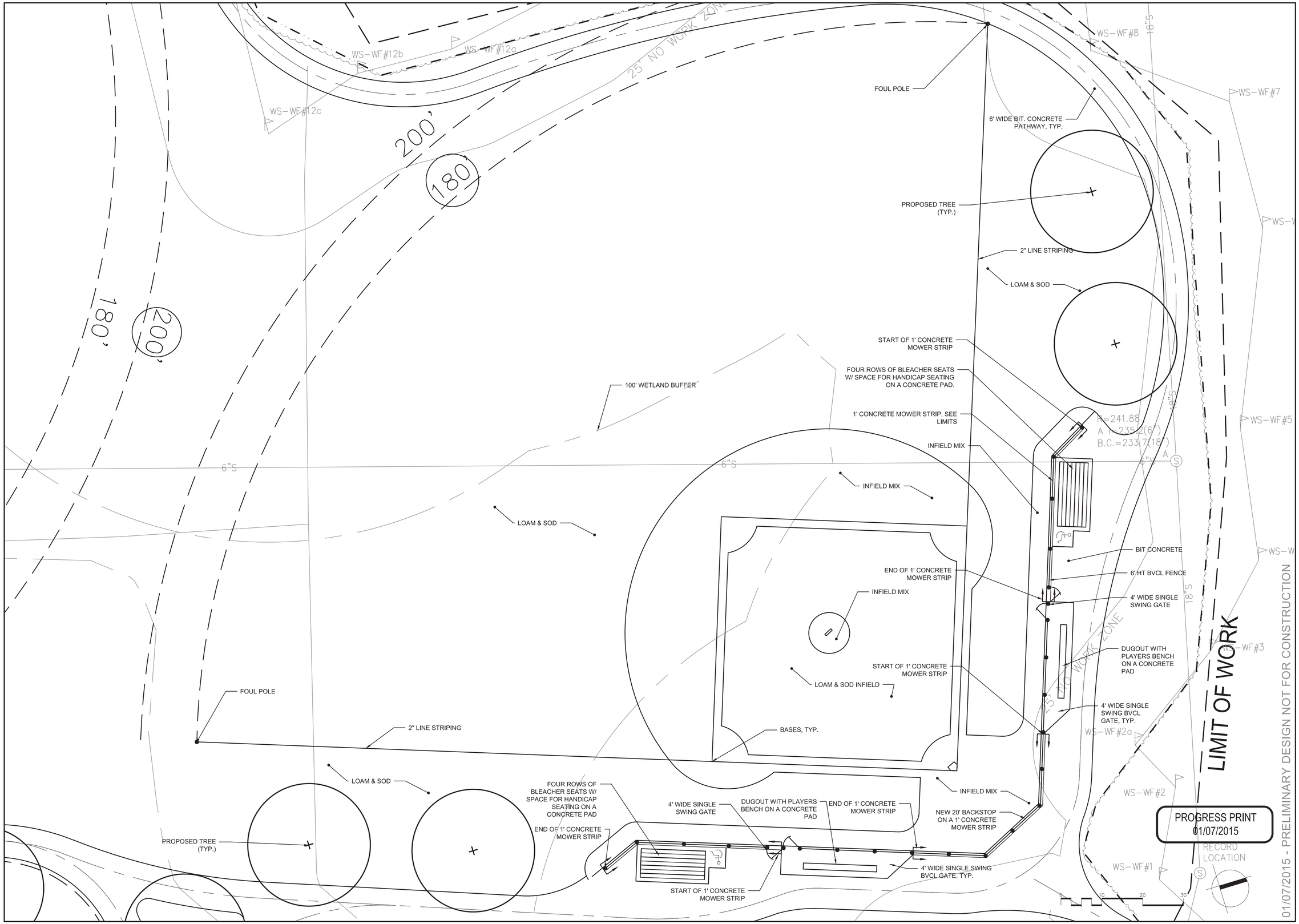

Project:

TOWN OF NEEDHAM, MA

NEWMAN PLAYING FIELDS & EASTMAN CONSERVATION AREA

Improvements Project

1155 CENTRAL AVE

Weston&Sampson

100 Foxborough Blvd., S.250 Foxborough, MA
(508) 698-3034 (800) Sampson
www.westonandsampson.com

Consultants:

North:

Revisions:

Rev	Date	Description

Seal:

PRELIMINARY DESIGN NOT FOR CONSTRUCTION

Date:	
Scale:	AS SHOWN
Drawn By:	ACG/EJA
Reviewed By:	MSM
Checked By:	LFK
Approved By:	ERB

Drawing Title:

FIELDS LAYOUT & MATERIALS ENLARGEMENT PLAN 2

Sheet Number:

L3.02

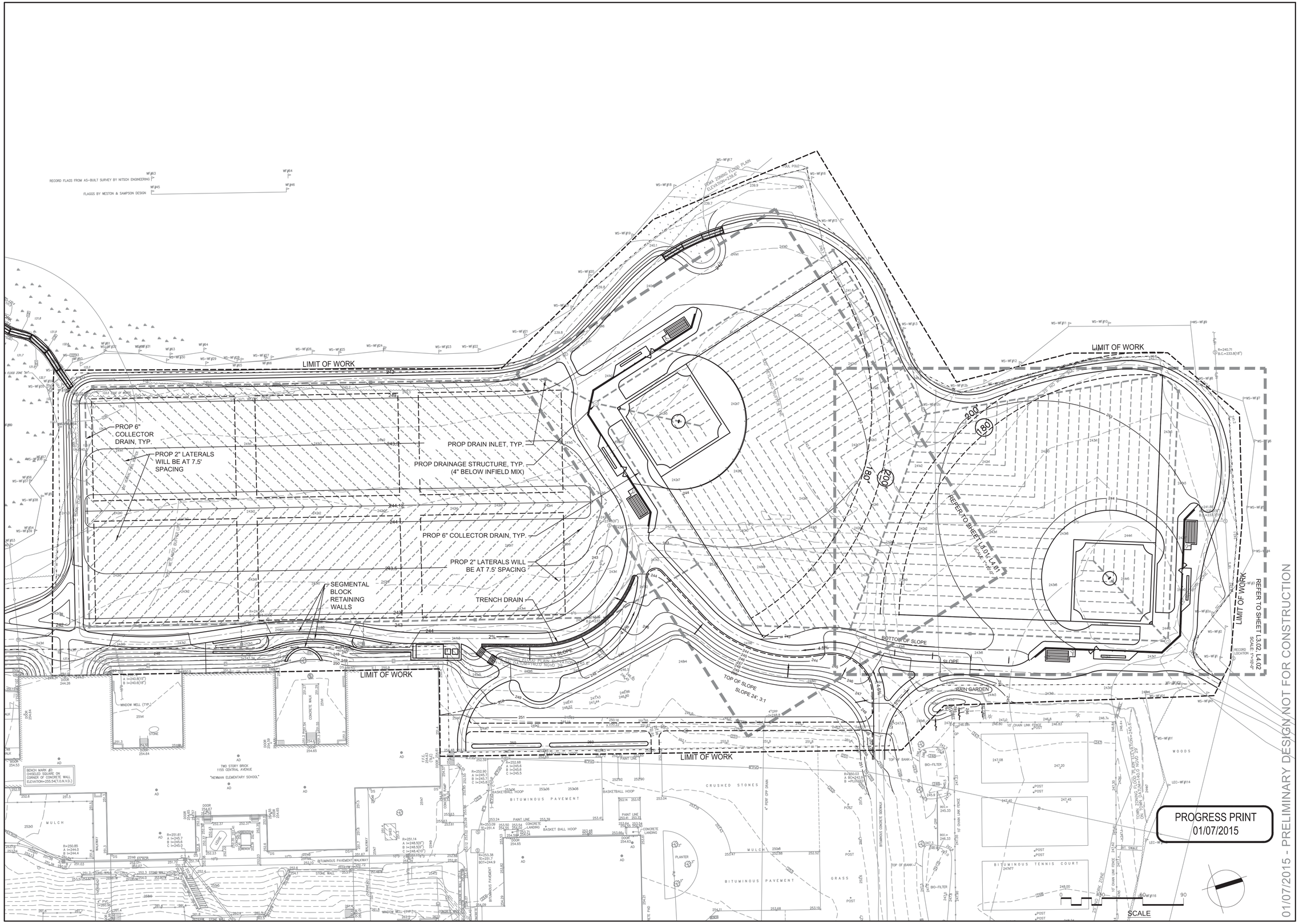

01/07/2015 - PRELIMINARY DESIGN NOT FOR CONSTRUCTION

Project:

TOWN OF NEEDHAM, MA

NEWMAN PLAYING FIELDS & EASTMAN CONSERVATION AREA

Improvements Project

1155 CENTRAL AVE

Weston&Sampson

100 Foxborough Blvd., S.250 Foxborough, MA
(508) 698-3034 (800) Sampson
www.westonandsampson.com

Consultants:

North:

Revisions:

Rev	Date	Description

Seal:

PRELIMINARY DESIGN NOT FOR CONSTRUCTION

Date:	
Scale:	AS SHOWN
Drawn By:	TJK/ EJA
Reviewed By:	MSM
Checked By:	LFK
Approved By:	ERB

Drawing Title:

FIELDS OVERALL GRADING & DRAINAGE PLAN

Sheet Number:

L4.00

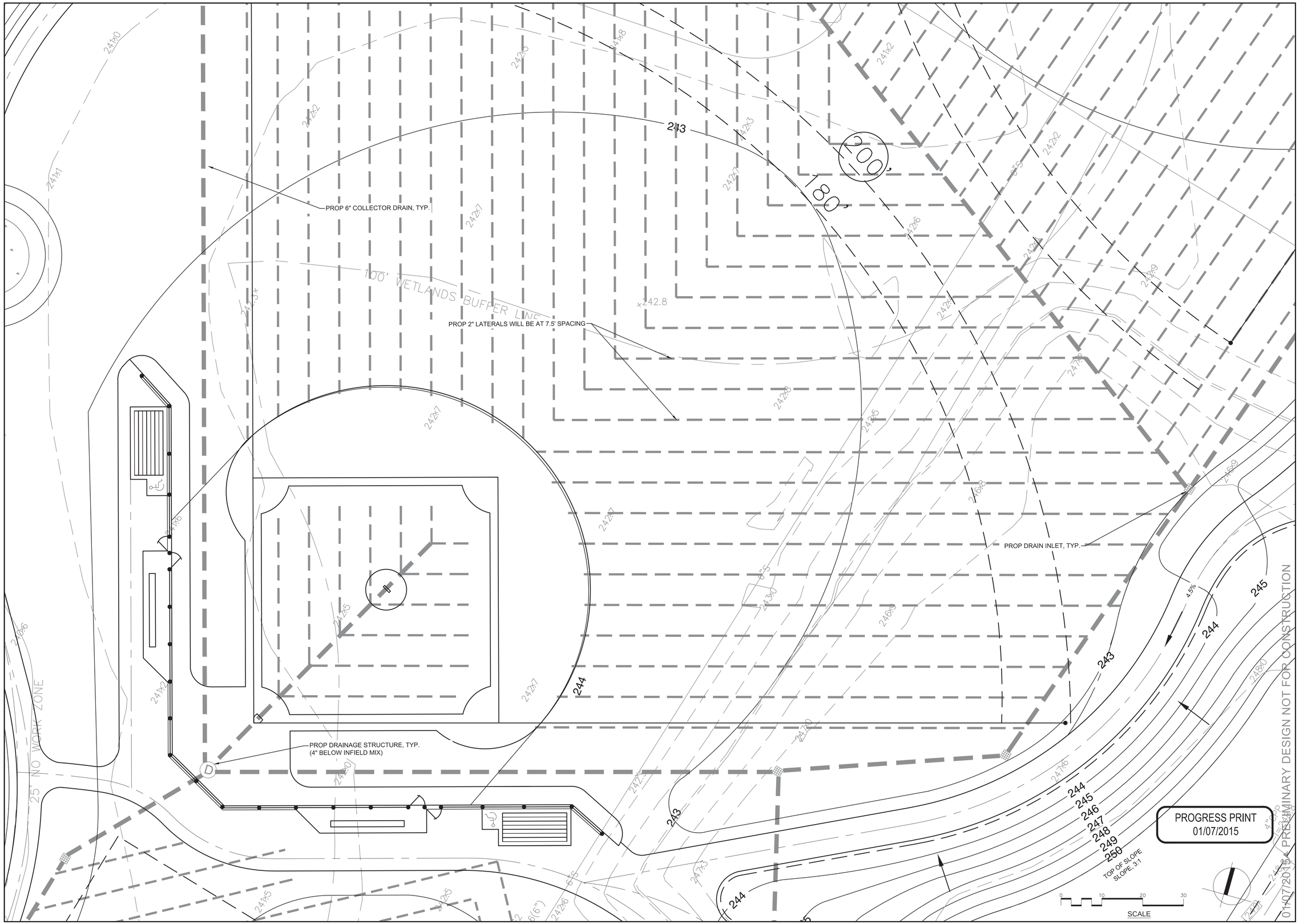

Project:

TOWN OF NEEDHAM, MA

NEWMAN PLAYING FIELDS & EASTMAN CONSERVATION AREA

Improvements Project

1155 CENTRAL AVE

Weston&Sampson

100 Foxborough Blvd., S.250 Foxborough, MA
(508) 698-3034 (800) Sampson
www.westonandsampson.com

Consultants:

North:

Revisions:

Rev	Date	Description

Seal:

PRELIMINARY DESIGN NOT FOR CONSTRUCTION

Date:	
Scale:	AS SHOWN
Drawn By:	TJK/ EJA
Reviewed By:	MSM
Checked By:	LFK
Approved By:	ERB

Drawing Title:

FIELDS GRADING & DRAINAGE ENLARGEMENT PLAN 1

Sheet Number:

L4.01

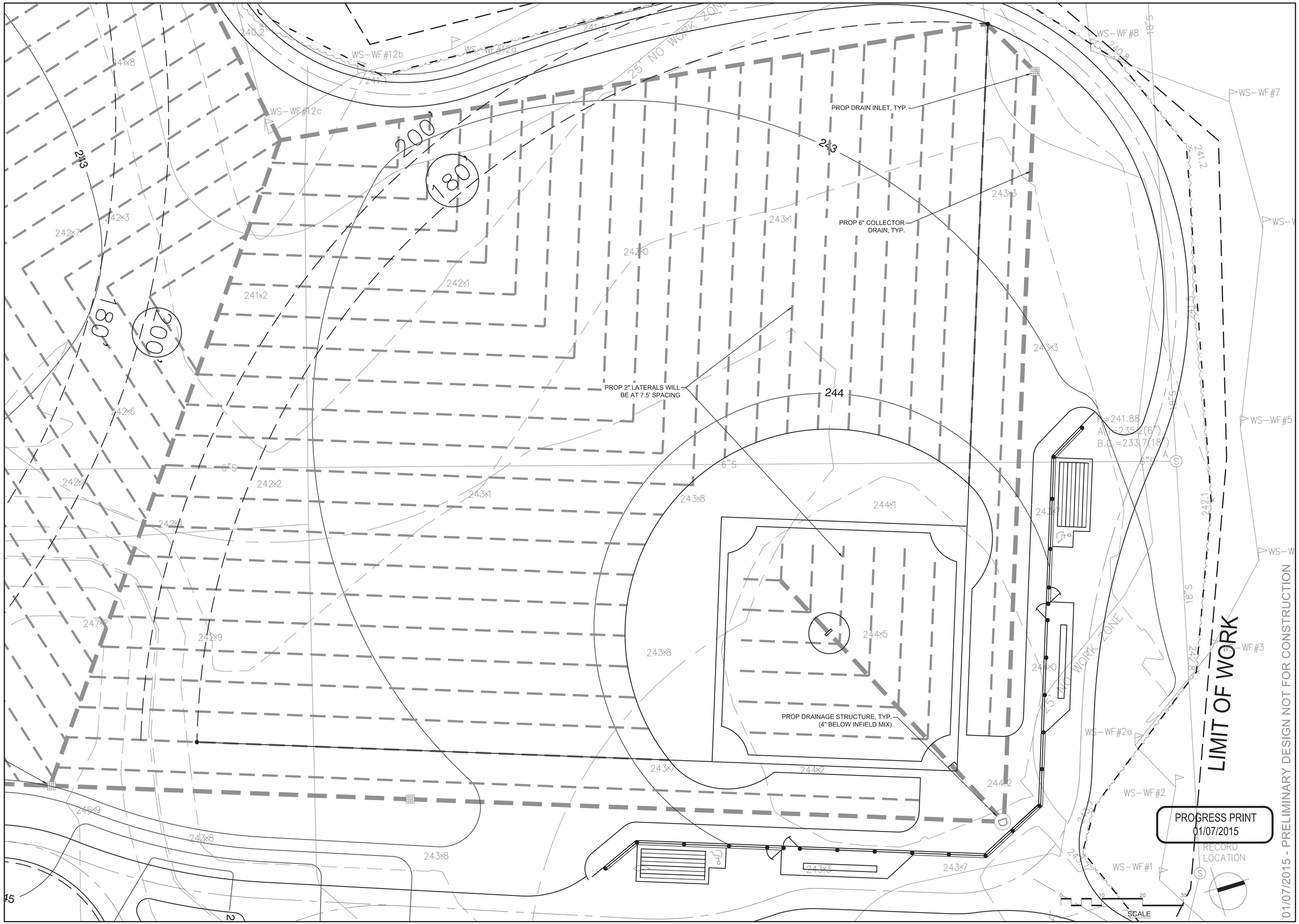

Project:

TOWN OF NEEDHAM, MA

NEWMAN PLAYING FIELDS & EASTMAN CONSERVATION AREA

Improvements Project

1155 CENTRAL AVE

Weston&Sampson

100 Foxborough Blvd., S.250 Foxborough, MA
(508) 698-3034 (800) Sampson
www.westonandsampson.com

Consultants:

North:

Revisions:

Rev	Date	Description

Seal:

PRELIMINARY DESIGN NOT FOR CONSTRUCTION

Date:

Scale:	AS SHOWN
Drawn By:	TJK/ EJA
Reviewed By:	MSM
Checked By:	LFK
Approved By:	ERB

Drawing Title:

FIELDS GRADING & DRAINAGE ENLARGEMENT PLAN 2

Sheet Number:

L4.02

01/07/2015 - PRELIMINARY DESIGN NOT FOR CONSTRUCTION

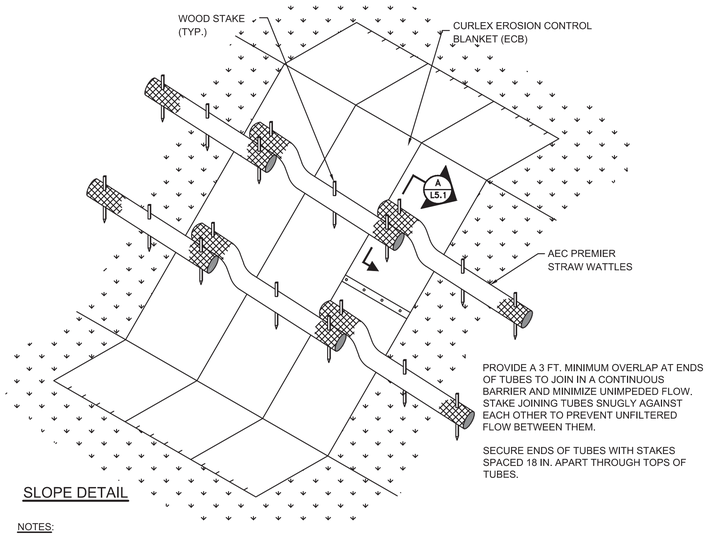

SLOPE DETAIL

NOTES:

1. BEGIN AT THE LOCATION WHERE THE WATTLE IS TO BE INSTALLED BY EXCAVATING A 2-3" DEEP X 9" WIDE TRENCH ALONG THE CONTOUR OF THE SLOPE. EXCAVATED SOIL SHOULD BE PLACED UP-SLOPE FROM THE ANCHOR TRENCH.

2. PLACE THE WATTLE IN THE TRENCH SO THAT IT CONTOURS TO THE SOIL SURFACE. COMPACT SOIL FROM THE EXCAVATED TRENCH AGAINST THE WATTLE ON THE UPHILL SIDE. ADJACENT WATTLES SHOULD TIGHTLY ABUT.

3. SECURE THE WATTLE WITH 24" STAKES EVERY 3-4' AND WITH A STAKE ON EACH END. STAKES SHOULD BE DRIVEN THROUGH THE MIDDLE OF THE WATTLE LEAVING AT LEAST 2-3" OF STAKE EXTENDING ABOVE THE WATTLE. STAKES SHOULD BE DRIVEN PERPENDICULAR TO SLOPE FACE.

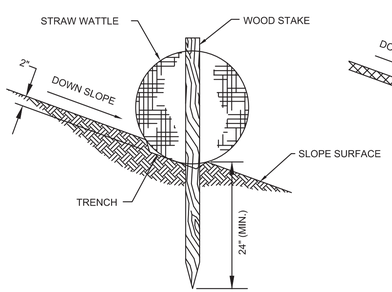

STAKE DETAIL (ON BARE SOIL)

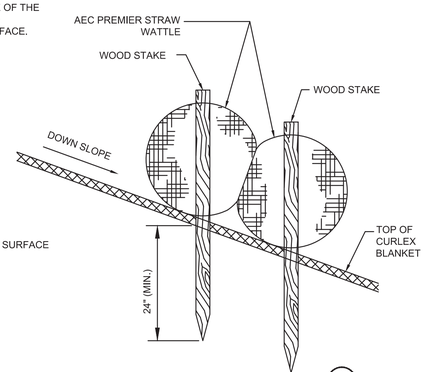

STAKE DETAIL SECTION

A

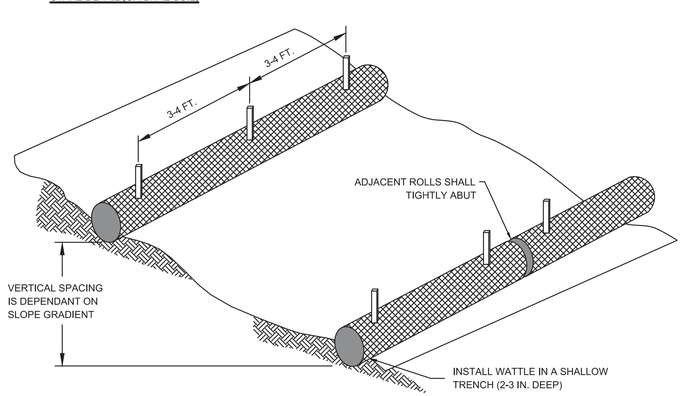

1 STRAW WATTLE DETAIL

SCALE: N.T.S.

CONSTRUCTION SPECIFICATIONS ON SILTATION & EROSION CONTROL

1. EROSION CONTROL MEASURES SHALL BE INCORPORATED IN THE SEQUENCE OF CONSTRUCTION TO PREVENT SEDIMENT LADEN WATER FROM LEAVING THE SITE.
2. AREAS SUBJECT TO EROSION SHALL BE MINIMIZED IN TERMS OF TIME AND AREA.
3. IN GENERAL, WORK REQUIRING EROSION CONTROL INCLUDES EXCAVATIONS, FILLS, DRAINAGE, SWALES AND DITCHES, ROUGH AND FINISH GRADING, AND STOCKPILING OF EARTH.
4. DO NOT DISTURB VEGETATION AND TOPSOIL BEYOND THE PROPOSED LIMIT OF SILT FENCE ACTIVITIES.
5. TEMPORARY SILT FENCE SHALL BE PLACED AS SHOWN ON THE PLAN. PERMANENTLY STABILIZE EACH COMPLETED SEGMENT OF CONSTRUCTION.
6. THE CONTRACTOR SHALL REMOVE TEMPORARY SILT FENCE AND ALL ACCUMULATED SILT AND DEBRIS AFTER COMPLETION OF CONSTRUCTION OPERATIONS.
7. SILT FENCE SHALL BE IN PLACE AT ALL TIMES DURING CONSTRUCTION.
8. THE CONTRACTOR SHALL REMOVE AND DISPOSE OF ALL SILT AND DEBRIS FROM EACH DRAINAGE STRUCTURE UPON COMPLETION OF THE PROJECT.
9. OBJECTS AND/OR AREAS DAMAGED BY THE CONTRACTOR'S OPERATIONS SHALL BE RESTORED TO THEIR ORIGINAL CONDITION.
10. ALL DISTURBED AREAS SHALL BE RESTORED TO EXISTING GRADE. INSPECTION SHALL BE FREQUENT AND REPAIR OR REPLACEMENT SHALL BE MADE AS NEEDED.
11. SILT FENCE SHALL BE REMOVED UPON THE SATISFACTORY COMPLETION OF ALL WORK SO AS NOT TO BLOCK OR IMPEDE STORM FLOW OR DRAINAGE.

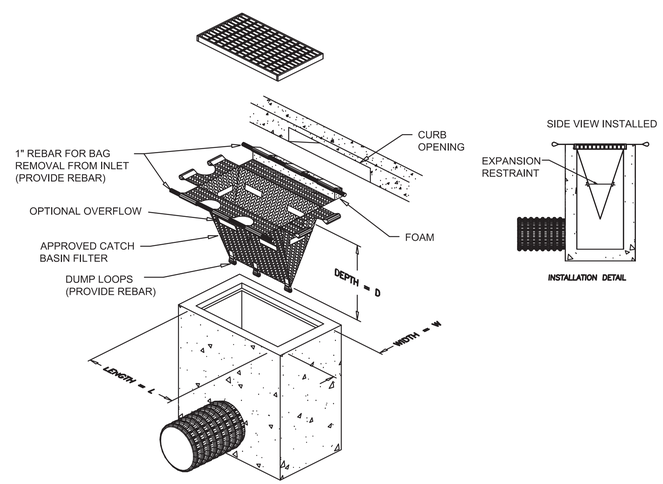

2 INLET SEDIMENT CONTROL

SCALE: N.T.S.

NOTE:
FOR TREES THAT OCCUR IN GROUPS PROVIDE TREE PROTECTION FENCE AROUND ENTIRE AREA. SEE PLAN FOR LOCATIONS.

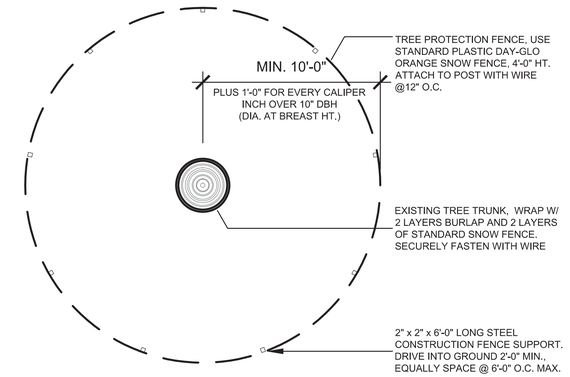

NOTE:
PROTECTIVE BARRICADE TO BE PLACED A MINIMUM OF 10' FROM BASE OF TREE PLUS AN ADDITIONAL 1' FOR EACH ADDITIONAL DBH FOR TREES GREATER THAN 10" DBH (DIA. AT BREAST HT.)
ALL WORK DONE WITHIN PROTECTIVE BARRICADES IS TO BE DONE BY HAND AND LIGHT EQUIPMENT.

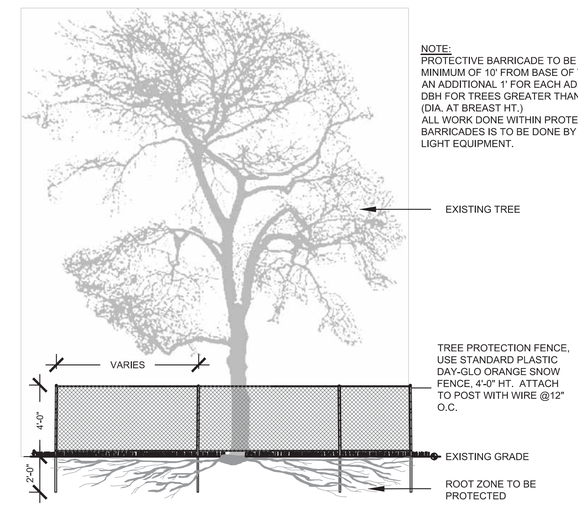

3 TREE PROTECTION FENCE

SCALE: N.T.S.

PROGRESS PRINT
01/07/2015

01/07/2015 - PRELIMINARY DESIGN NOT FOR CONSTRUCTION

Project:

TOWN OF NEEDHAM, MA

NEWMAN PLAYING FIELDS & EASTMAN CONSERVATION AREA
Improvements Project
1155 CENTRAL AVE

Weston&Sampson
100 Foxborough Blvd., S.250 Foxborough, MA
(508) 698-3034 (800) Sampson
www.westonandsampson.com

Consultants:

North:

Revisions:

Rev	Date	Description

Seal:

PRELIMINARY DESIGN NOT FOR CONSTRUCTION

Date:

Scale:	AS SHOWN
Drawn By:	ACG/EJA
Reviewed By:	MSM
Checked By:	LFK
Approved By:	ERB

Drawing Title:

CONSTRUCTION DETAILS

Sheet Number:

L5.01

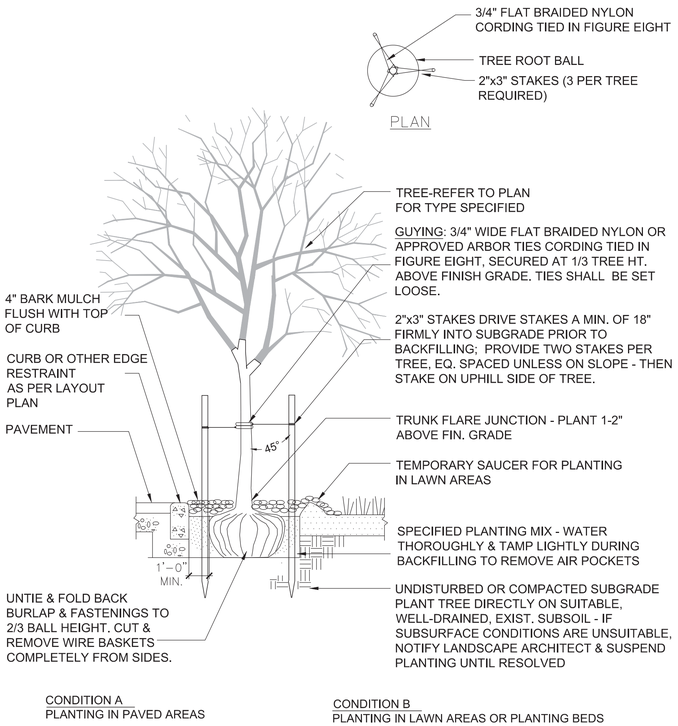

1 TREE STAKING & PLANTING - 2 CONDITIONS

SCALE: N.T.S.

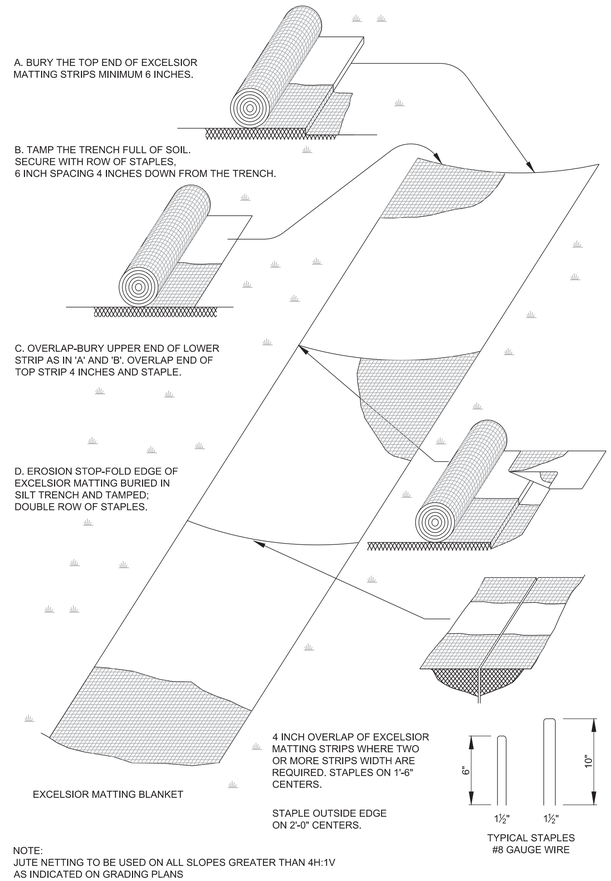

NOTE:
JUTE NETTING TO BE USED ON ALL SLOPES GREATER THAN 4H:1V AS INDICATED ON GRADING PLANS

3 EROSION CONTROL BLANKET

SCALE: N.T.S.

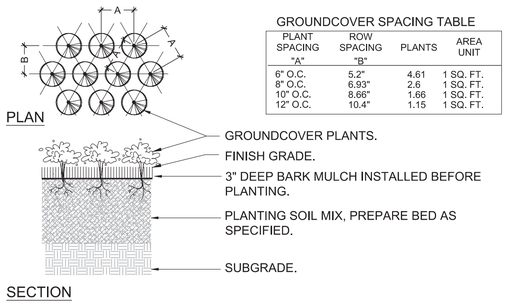

GROUNDCOVER SPACING TABLE

PLANT SPACING "A"	ROW SPACING "B"	PLANTS	AREA UNIT
6" O.C.	5.2"	4.61	1 SQ. FT.
8" O.C.	6.93"	2.6	1 SQ. FT.
10" O.C.	8.66"	1.66	1 SQ. FT.
12" O.C.	10.4"	1.15	1 SQ. FT.

NOTES:
1. ALL GROUNDCOVER TO BE PLANTED IN TRIANGULAR PATTERN. SEE DETAIL PLAN AND GROUNDCOVER SPACING TABLE.
2. JUTE EROSION CONTROL MAT TO BE USED ON ALL SLOPES GREATER THAN 3:1

4 GROUNDCOVER PLANTING

SCALE: N.T.S.

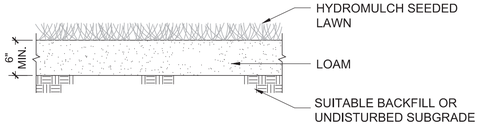

5 LOAM & SOD

SCALE: N.T.S.

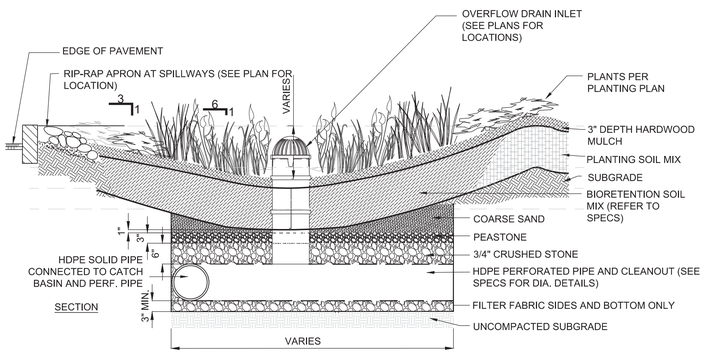

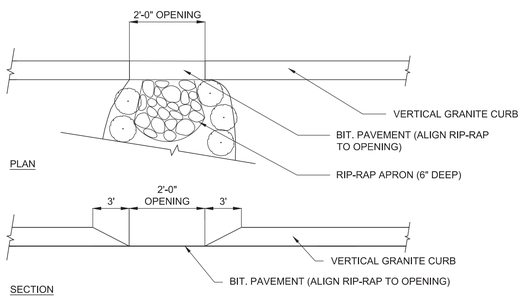

2 BIORETENTION SWALE ENLARGEMENT DETAIL

SCALE: N.T.S.

PROGRESS PRINT
01/07/2015

01/07/2015 - PRELIMINARY DESIGN NOT FOR CONSTRUCTION

Project:
TOWN OF NEEDHAM, MA

NEWMAN PLAYING FIELDS & EASTMAN CONSERVATION AREA
Improvements Project
1155 CENTRAL AVE

Weston&Sampson
100 Foxborough Blvd., S.250 Foxborough, MA
(508) 698-3034 (800) Sampson
www.westonandsampson.com

Consultants:

North:

Revisions:

Rev	Date	Description

Seal:

PRELIMINARY DESIGN NOT FOR CONSTRUCTION

Date:	
Scale:	AS SHOWN
Drawn By:	ACG/EJA
Reviewed By:	MSM
Checked By:	LFK
Approved By:	ERB

Drawing Title:
CONSTRUCTION DETAILS

Sheet Number:
L5.02

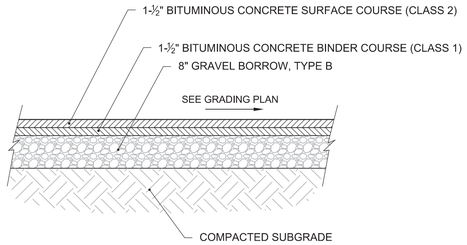

1 BITUMINOUS CONCRETE WALK DETAIL

SCALE: N.T.S.

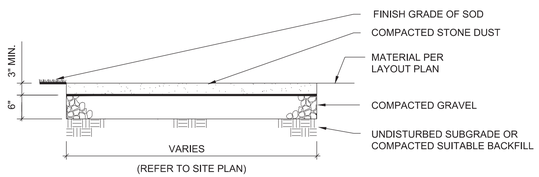

NOTE:
PITCH OF PATH VARIES

2 STONE DUST PATH

SCALE: N.T.S.

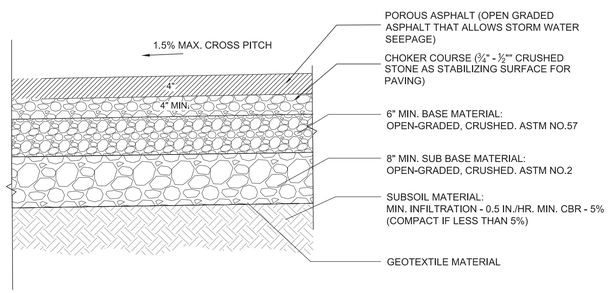

NOTES:
1. ALL AGGREGATE MATERIAL SHALL BE CRUSHED, ANGULAR STONE AND FREE OF FINES.
2. SURFACE SLOPE SHALL BE A MINIMUM OF 1% AND A MAXIMUM OF 5%.
3. INSTALL PVC UNDER DRAIN PIPE WHERE INFILTRATION RATE OF SUBSOIL IS LESS THAN 0.5 IN./HR.
4. MAINTAIN A MINIMUM DISTANCE OF 2' BETWEEN BOTTOM OF PERMEABLE BASE AND WATER TABLE.
5. THE MINIMUM AGGREGATE THICKNESS ARE AFTER COMPACTION.

3 POROUS ASPHALT PATH

SCALE: N.T.S.

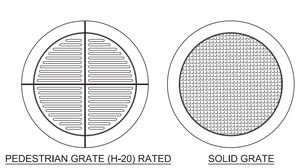

MATERIAL: DUCTILE IRON
QUALITY: MATERIAL SHALL CONFORM TO ASTM A48 - CLASS 30B
PAINT: CASTINGS ARE FURNISHED WITH A BLACK PAINT

4 24" DRAIN BASIN GRATE

SCALE: N.T.S.

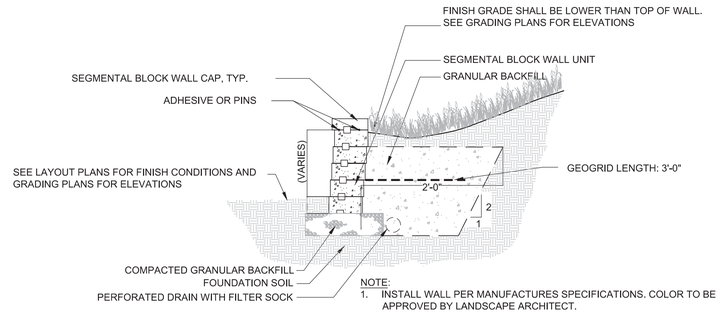

NOTE:
1. INSTALL WALL PER MANUFACTURES SPECIFICATIONS. COLOR TO BE APPROVED BY LANDSCAPE ARCHITECT.

5 SEGMENTAL RETAINING WALL DETAIL

SCALE: N.T.S.

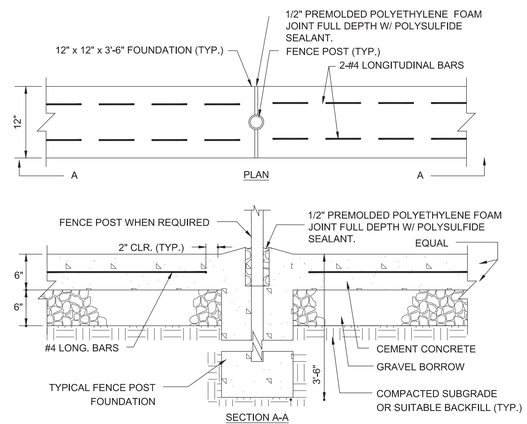

6 MOWER STRIP

SCALE: N.T.S.

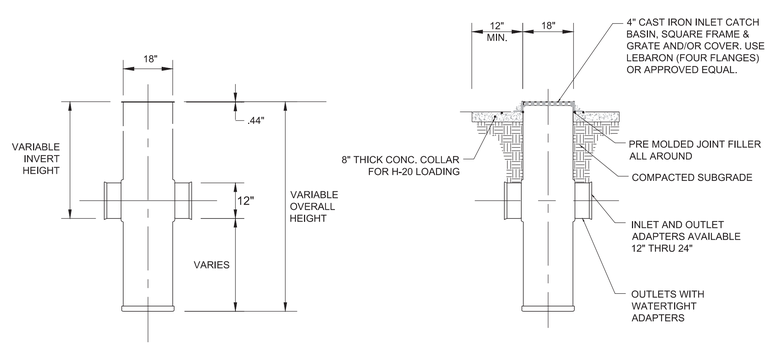

NOTES:
1. 18" MIN SUMP IS REQUIRED ON CATCH BASINS (DRAIN INLETS) ONLY.
2. GRATES AND/OR COVERS SHALL BE A MINIMUM 18" ROUND AT THE LOCATIONS INDICATED ON THE CONSTRUCTION PLAN.

7 PVC MANHOLE/CATCH BASIN (DRAIN INLET)

SCALE: N.T.S.

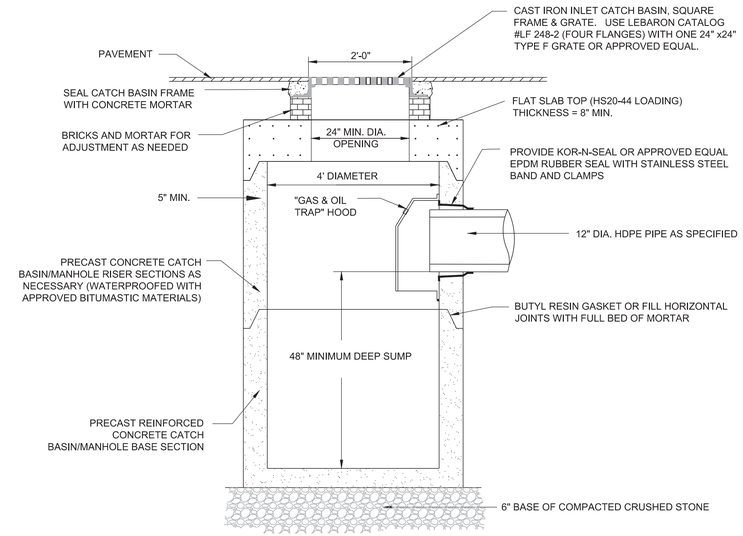

NOTE: FOR DOUBLE CATCH BASINS, STRUCTURE SHALL BE 6' IN DIAMETER.

8 STANDARD CATCH BASIN

SCALE: N.T.S.

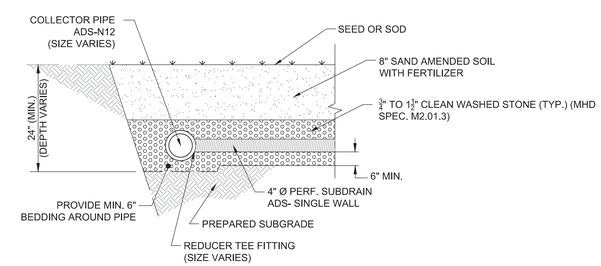

9 COLLECTOR DRAIN / LATERAL CONNECTION DETAIL

SCALE: N.T.S.

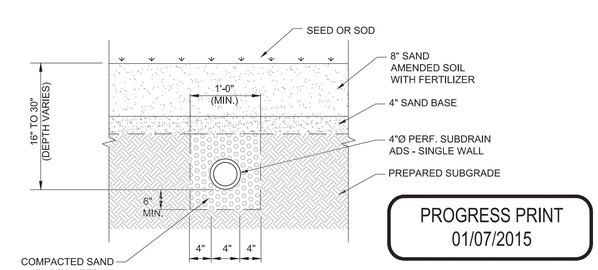

PROGRESS PRINT
01/07/2015

10 DRAINAGE TRENCH DETAIL

SCALE: N.T.S.

01/07/2015 - PRELIMINARY DESIGN NOT FOR CONSTRUCTION

Project:

TOWN OF NEEDHAM, MA

NEWMAN PLAYING FIELDS & EASTMAN CONSERVATION AREA
Improvements Project
1155 CENTRAL AVE

Weston&Sampson
100 Foxborough Blvd., S.250 Foxborough, MA
(508) 698-3034 (800) Sampson
www.westonandsampson.com

Consultants:

North:

Revisions:

Rev	Date	Description

Seal:

PRELIMINARY DESIGN NOT FOR CONSTRUCTION

Date:	
Scale:	AS SHOWN
Drawn By:	ACG/EJA
Reviewed By:	MSM
Checked By:	LFK
Approved By:	ERB

Drawing Title:

CONSTRUCTION DETAILS

Sheet Number:

L5.03

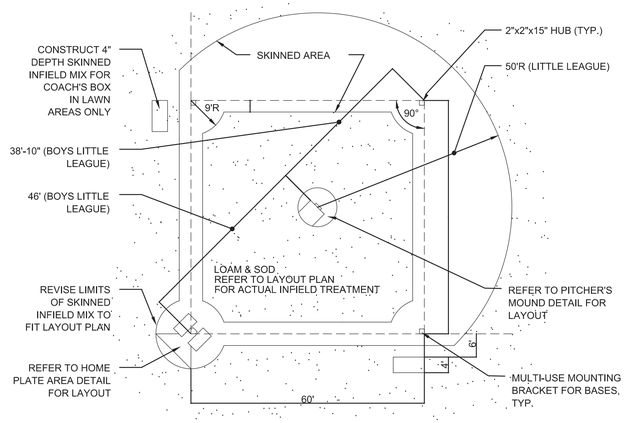

1 INFIELD LAYOUT PLAN

SCALE: N.T.S.

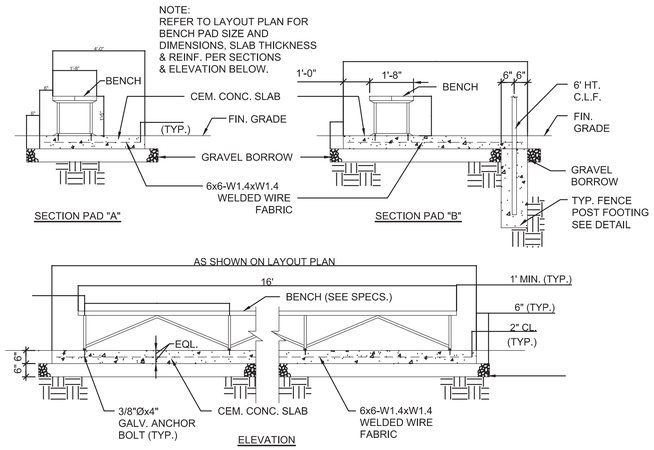

4 PLAYERS BENCH CONCRETE PAD

SCALE: N.T.S.

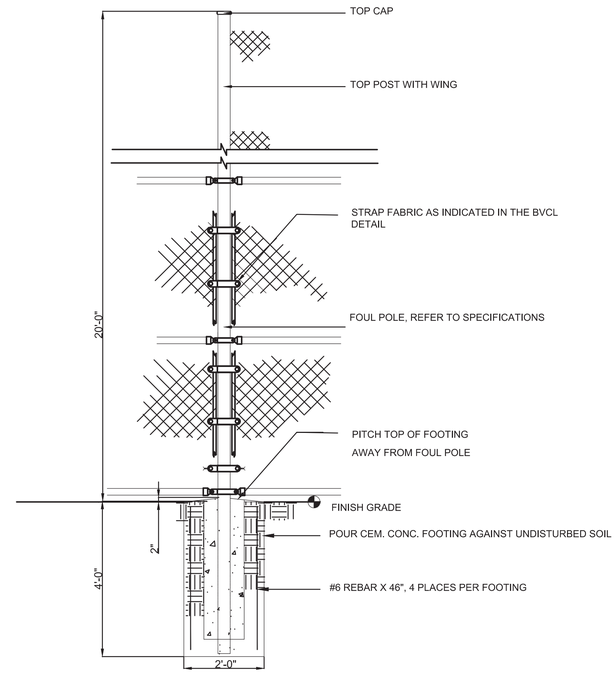

6 FOUL POLE

SCALE: N.T.S.

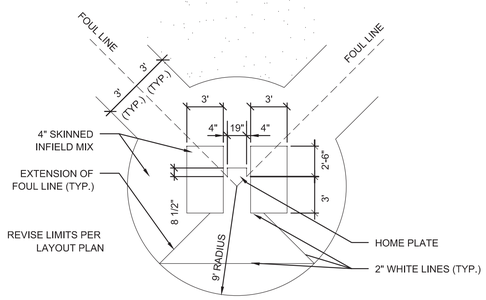

NOTE: ALL DIMENSIONS ARE GIVEN TO OUTSIDE OF WHITE LINES.

2 HOME PLATE DETAIL

SCALE: N.T.S.

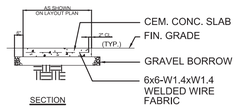

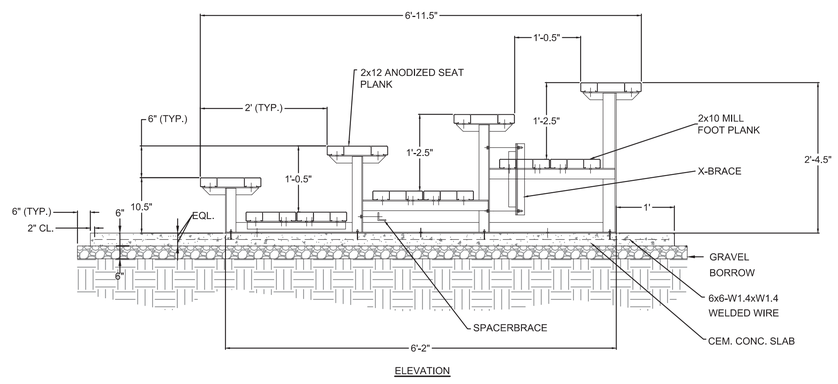

NOTE: MAINTAIN 1'-0" CLEARANCE BETWEEN EDGE OF PAD AND OUTSIDE PERIMETER OF OBJECT ON PAD.

5 CEMENT CONCRETE PAD FOR BLEACHERS

SCALE: N.T.S.

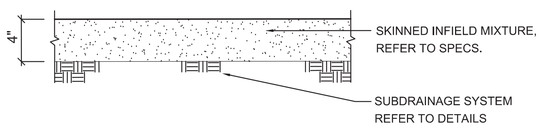

3 SKINNED INFIELD MIX

SCALE: N.T.S.

PROGRESS PRINT
01/07/2015

01/07/2015 - PRELIMINARY DESIGN NOT FOR CONSTRUCTION

Project:

TOWN OF NEEDHAM, MA

NEWMAN PLAYING FIELDS & EASTMAN CONSERVATION AREA
Improvements Project
1155 CENTRAL AVE

Weston&Sampson
100 Foxborough Blvd., S.250 Foxborough, MA
(508) 698-3034 (800) Sampson
www.westonandsampson.com

Consultants:

North:

Revisions:

Rev	Date	Description

Seal:

PRELIMINARY DESIGN NOT FOR CONSTRUCTION

Date:	
Scale:	AS SHOWN
Drawn By:	ACG/EJA
Reviewed By:	MSM
Checked By:	LFK
Approved By:	ERB

Drawing Title:

CONSTRUCTION DETAILS

Sheet Number:

L5.04

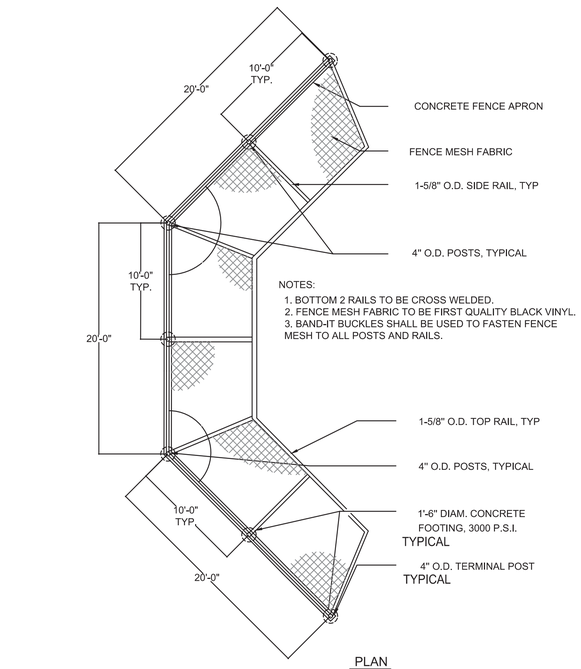

NOTES:
1. BOTTOM 2 RAILS TO BE CROSS WELDED.
2. FENCE MESH FABRIC TO BE FIRST QUALITY BLACK VINYL.
3. BAND-IT BUCKLES SHALL BE USED TO FASTEN FENCE MESH TO ALL POSTS AND RAILS.

PLAN

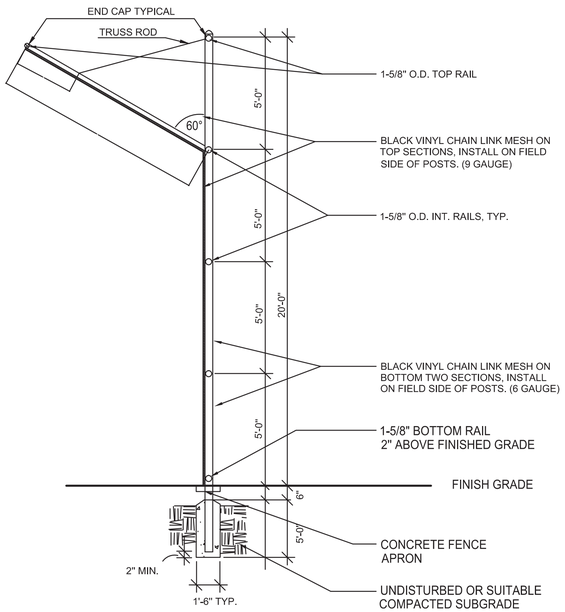

SECTION

1 BACKSTOP - PLAN & SECTION

SCALE: N.T.S.

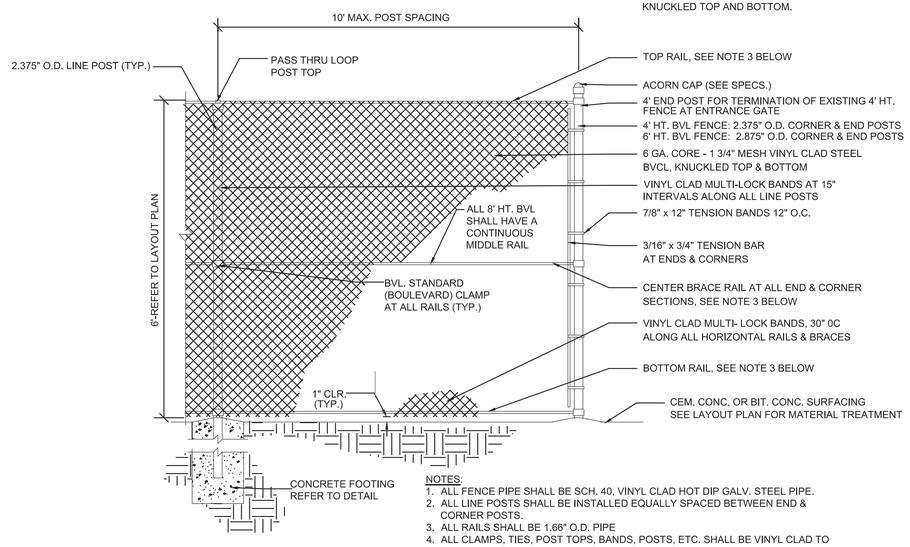

NOTES:
1. ALL FENCE PIPE SHALL BE SCH. 40, VINYL CLAD HOT DIP GALV. STEEL PIPE.
2. ALL LINE POSTS SHALL BE INSTALLED EQUALLY SPACED BETWEEN END & CORNER POSTS.
3. ALL RAILS SHALL BE 1.66" O.D. PIPE
4. ALL CLAMPS, TIES, POST TOPS, BANDS, POSTS, ETC. SHALL BE VINYL CLAD TO MATCH FABRIC.
5. REFER TO SHEET E5.1 FOR BONDING AND GROUNDING REQUIREMENTS
6. REFER TO SPECS. FOR GATE REQUIREMENTS.

2 BLACK VINYL CHAIN LINK FENCE

SCALE: N.T.S.

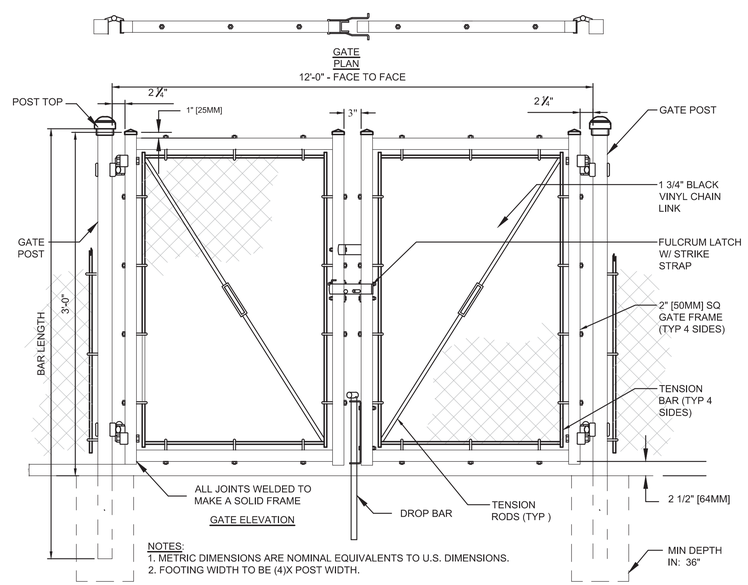

NOTES:
1. METRIC DIMENSIONS ARE NOMINAL EQUIVALENTS TO U.S. DIMENSIONS.
2. FOOTING WIDTH TO BE (4)X POST WIDTH.

3 BLACK VINYL CHAIN LINK FENCE DOUBLE SWING GATE

SCALE: N.T.S.

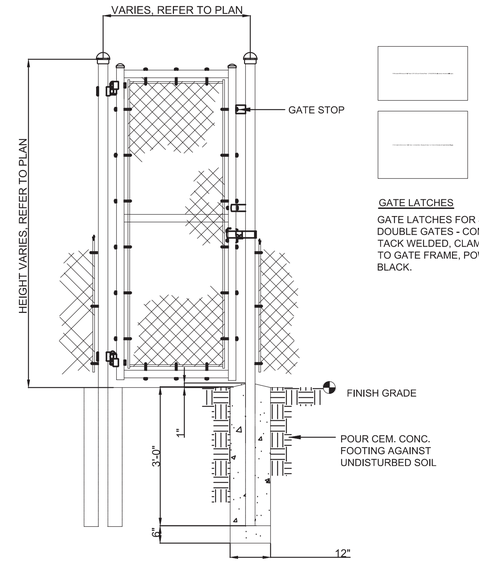

GATE LATCHES

GATE LATCHES FOR SINGLE AND DOUBLE GATES - COMMERCIAL SERIES, TACK WELDED, CLAMPED AND BOLTED TO GATE FRAME, POWDER COATED BLACK.

4 BLACK VINYL CHAIN LINK FENCE

SCALE: N.T.S.

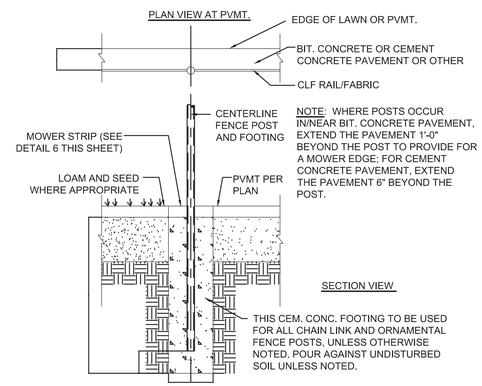

NOTE: WHERE POSTS OCCUR IN/NEAR BIT. CONCRETE PAVEMENT, EXTEND THE PAVEMENT 1'-0" BEYOND THE POST TO PROVIDE FOR A MOWER EDGE: FOR CEMENT CONCRETE PAVEMENT, EXTEND THE PAVEMENT 6" BEYOND THE POST.

5 TYPICAL FENCE POST FOUNDATION

SCALE: N.T.S.

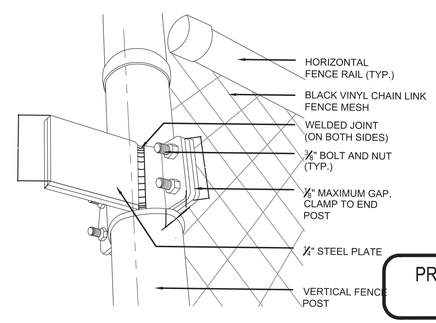

PROGRESS PRINT
01/07/2015

6 GATE STOP

SCALE: N.T.S.

Project:

TOWN OF NEEDHAM, MA

NEWMAN PLAYING FIELDS & EASTMAN CONSERVATION AREA
Improvements Project
1155 CENTRAL AVE

Weston&Sampson
100 Foxborough Blvd., S.250 Foxborough, MA
(508) 698-3034 (800) Sampson
www.westonandsampson.com

Consultants:

North:

Revisions:

Rev	Date	Description

Seal:

PRELIMINARY DESIGN NOT FOR CONSTRUCTION

Date:	
Scale:	AS SHOWN
Drawn By:	ACG/EJA
Reviewed By:	MSM
Checked By:	LFK
Approved By:	ERB

Drawing Title:

CONSTRUCTION DETAILS

Sheet Number:

L5.05

01/07/2015 - PRELIMINARY DESIGN NOT FOR CONSTRUCTION

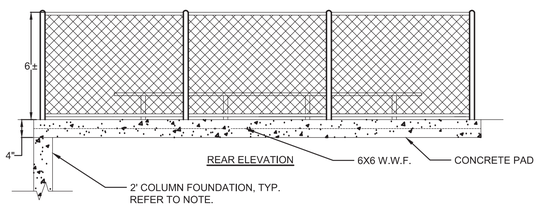

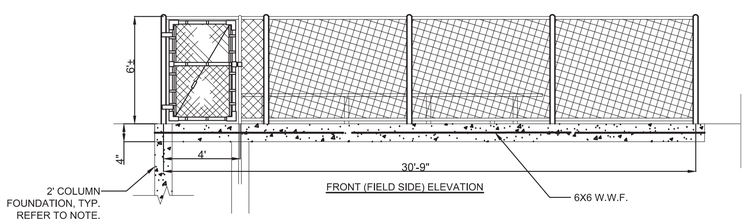

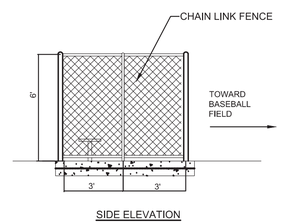

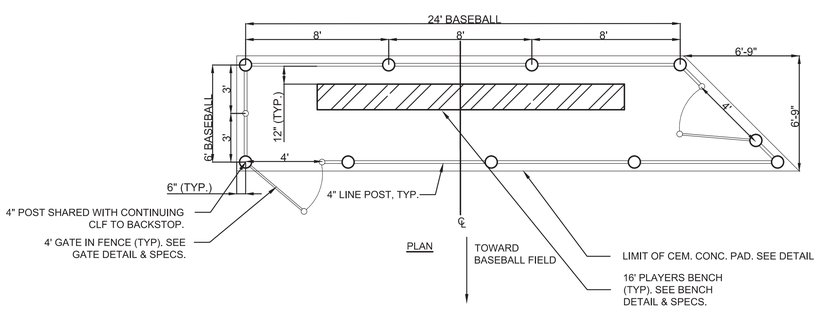

NOTES:

1. EACH COLUMN SHALL BE ANCHORED IN AN 2'Ø BY 4'-6" REINFORCED CEMENT CONCRETE FOOTING. REINFORCING #4 BARS, 12" E.W.

1 DUGOUT DETAIL

SCALE: N.T.S.

PROGRESS PRINT
01/07/2015

01/07/2015 - PRELIMINARY DESIGN NOT FOR CONSTRUCTION

Project:

TOWN OF NEEDHAM, MA

NEWMAN PLAYING FIELDS & EASTMAN CONSERVATION AREA

Improvements Project

1155 CENTRAL AVE

Weston&Sampson

100 Foxborough Blvd., S.250 Foxborough, MA
(508) 698-3034 (800) Sampson
www.westonandsampson.com

Consultants:

North:

Revisions:

Rev	Date	Description

Seal:

PRELIMINARY DESIGN NOT FOR CONSTRUCTION

Date:	
Scale:	AS SHOWN
Drawn By:	ACG/EJA
Reviewed By:	MSM
Checked By:	LFK
Approved By:	ERB

Drawing Title:

CONSTRUCTION DETAILS

Sheet Number:

L5.06

OVERALL PLAN

Newman Fields + Eastman Conservation Area

TOWN OF NEEDHAM
MASSACHUSETTS
PARK & RECREATION DEPARTMENT

Spurr
Weston&Sampson's
DESIGN STUDIO

NEWMAN PLAYING FIELDS

Newman Fields + Eastman Conservation Area

TOWN OF NEEDHAM
MASSACHUSETTS
PARK & RECREATION DEPARTMENT

Spurr
Weston&Sampson's
DESIGN STUDIO